A Reproduced Copy

OF

Reproduced for NASA

by the

NASA Scientific and Technical Information Facility

(NASA-CR-172794) SPACE OPERATIONS CENTER SYSTEMS ANALYSIS: STUDY EXTENSION Final Briefing Report (Boeing Aerospace Co., Seattle, Wash.) 485 p

N84-73577

Unclas

00/14 12142

FFNo 672 Aug 65

SPACE OPERATIONS CENTER

SYSTEM ANALYSIS

STUDY EXTENSION

FINAL BRIEFING

D180-26785-3
JANUARY 12, 1982

JAN 1984
RECEIVED
NASA STI FACILITY
ACCESS DEPT.

LIBRARY COPY

LANGLEY RESEARCH CENTER
LIBRARY, NASA
HAMPTON, VIRGINIA

DRL T-1591
LINE ITEM 5
DRD MA-697-7

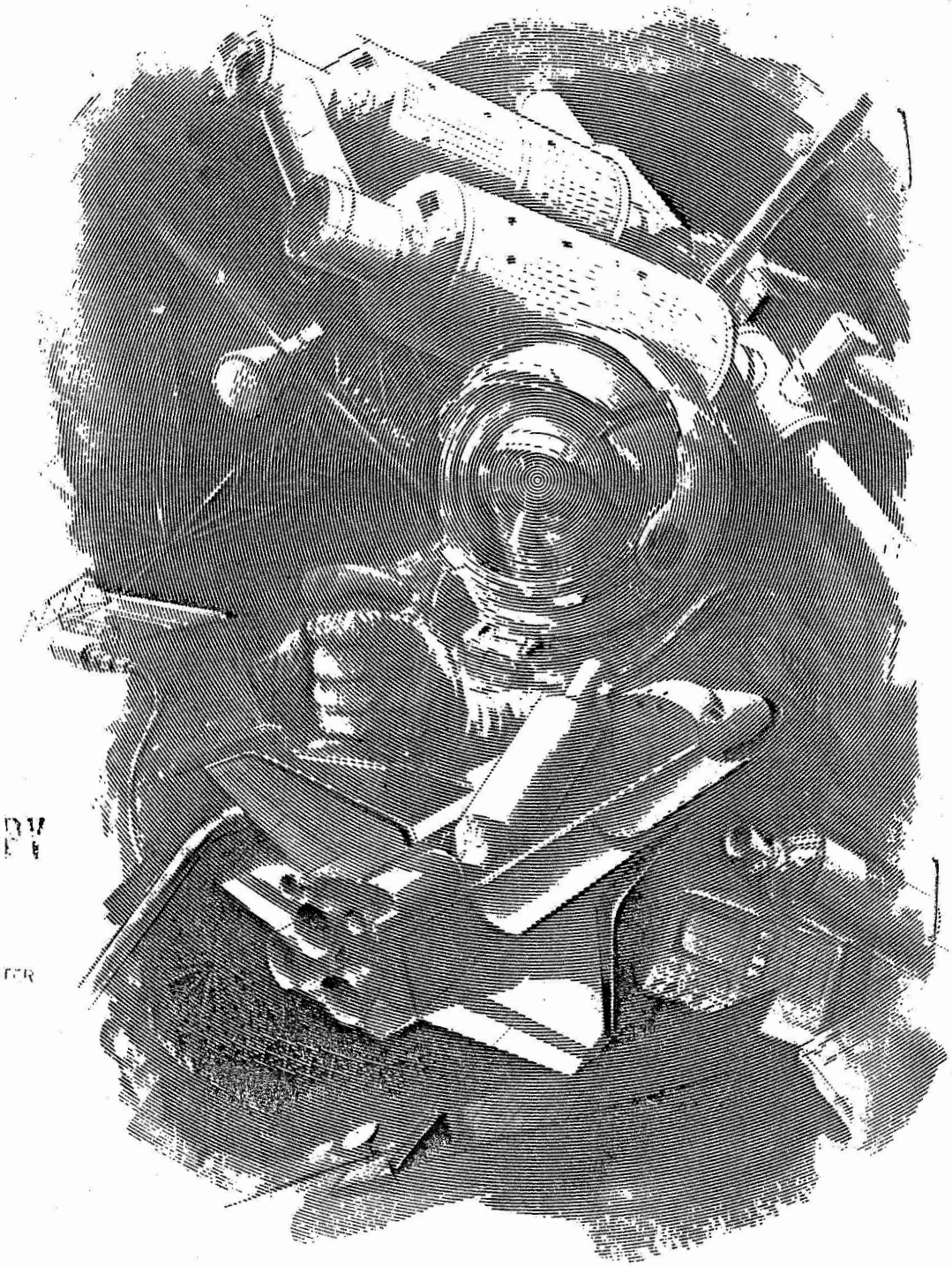

THE BOEING COMPANY

HAMILTON STANDARD Division of UNITED TECHNOLOGIES

GRUMMAN

SOC-241

Space Operations Center

System Analysis

Contract NAS9-16151
Exhibit B

Study Extension

FINAL BRIEFING

JANUARY 12, 1982

Large Space Systems Group
Boeing Aerospace Company
Seattle, Washington

820063-001

SPACE
OPERATIONS
CENTER

NASA
SOC-1563

Agenda

BOEING

9:30	Executive Summary	Woodcock
10:30	Mission Needs and Modeling	Woodcock
11:30	Orbital Operations	Miller
	Lunch	
1:00	Crew Requirements	Miller
1:30	Satellite Servicing	McCaffrey
2:30	SOC/Research and Applications	Miller
3:00	Flight Operations	Miller
3:30	GEO SOC	Miller
4:00	Programmatics	Woodcock
4:45	Closing	Woodcock

820063-002

Executive Summary

SOC SYSTEM ANALYSIS STUDY OVERVIEW

The Space Operations Center study was conducted in two parts: Phase A Systems Analysis and a Phase A extension. The study began with a Space Operations Center configuration defined by the Johnson Space Center. The missions for the system were specified as space construction, flight support operations, and satellite servicing. Facilities to support these operations were analyzed and defined in concert with subsystem and configuration analyses and trades, operations analyses, and habitability analyses and trades. Paralleling with these activities, a preliminary mission needs analysis was conducted on IR&D. These studies resulted in a set of SOC system design requirements (updating an earlier requirements document developed by JSC), a set of reference configurations and operational concepts, and a set of cost and programmatics analyses. These were supplemented by evolutionary concepts based on the mission needs analysis.

The Phase A Extension concentrated primarily on mission needs and mission modeling analyses to provide a sound foundation for SOC System design and program planning. In parallel with this, an IR&D activity investigated system design and configuration alternatives. The study also examined application of the SOC systems to a geosynchronous SOC and investigated certain external tank applications. A significant effort was invested in flight and crew operations analysis, supported by IR&D to update and extend software used for this purpose. These activities concluded with programmatics analyses and provided a set of updated SOC requirements, configurations and program recommendations.

SPACE OPERATIONS CENTER

NASA

SOC-1555

SOC System Analysis Study Overview

BOEING

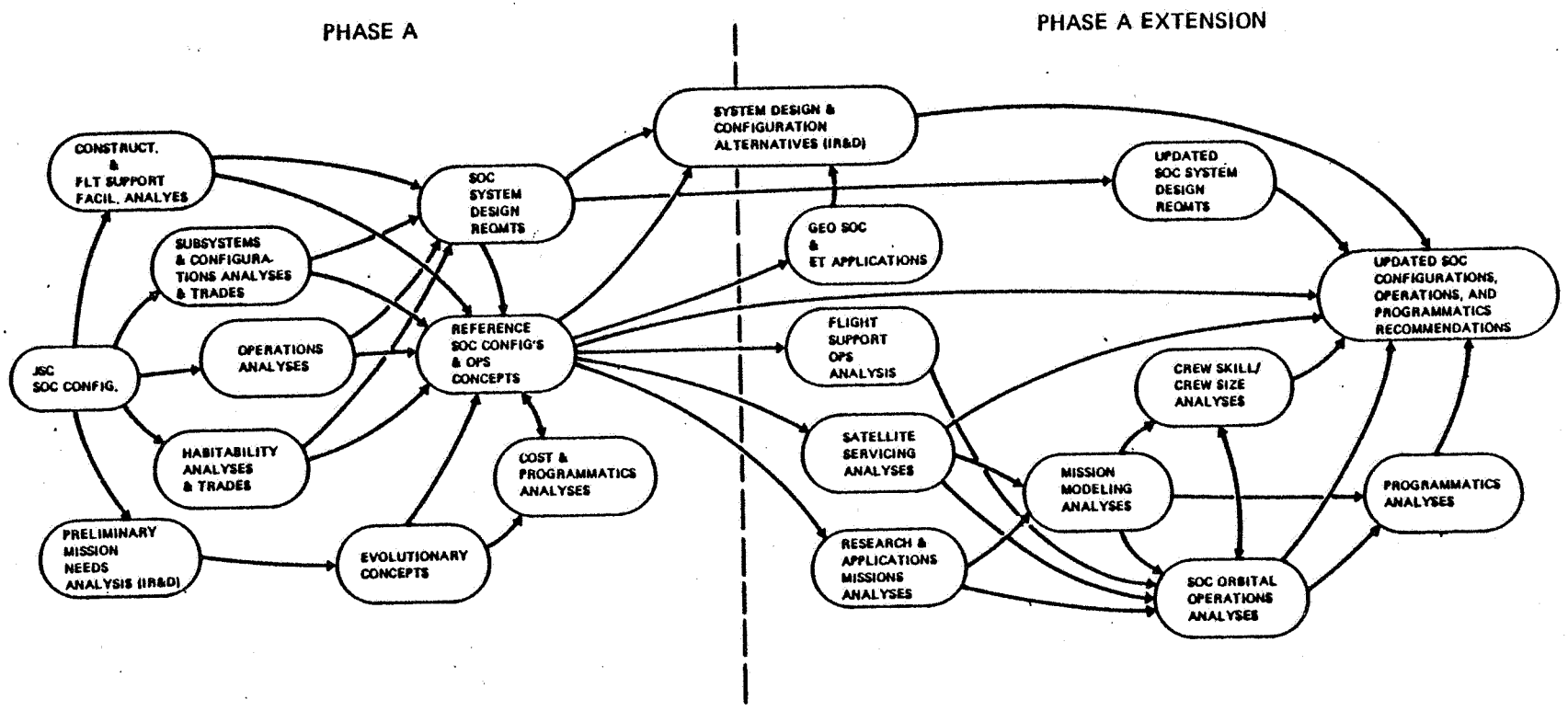

SUMMARY OF FINDINGS
SOC PHASE A EXTENSION

Mission models for the SOC time period developed as a part of this study are dominated by commercial and DOD requirements. The commercial requirements stem primarily from space communications, with a substantial materials processing activity in the high mission model. The DOD requirements stem from spacecraft launches for DOD missions.

The analysis of SOC operations based on these mission models validated SOC mission needs. The mission needs are correlated with national goals of economic advancement and defense. SOC mission utility places an initial emphasis on applications science and technology. Later, this evolves to a major operations support role including satellite servicing and spacecraft final assembly, test and checkout for large complex spacecraft, space basing of orbit transfer stages, and decoupling of launch vehicle operations with upper stage operations. A preliminary estimate of SOC cost/benefit ratios was made. These ratios are favorable to the SOC development.

As anticipated, an evolutionary program is the best fit to the mission needs. We found for the low and median traffic models an initial need for two to four people with a growth to 12 to 20 people by the year 2000. The high mission model begins somewhat larger and grows to a need for more than 50 people in space by the year 2000.

In order to reduce the peak funding costs for the system development, we found an initial configuration that can be implemented with a single module. This module is outfitted as a habitable service module and with some modifications as a resupply module. Later habitat modules can be added to this system for growth from an initial capability of four people to a later capability of 12. Finally, the modular approach offers improved system versatility over earlier concepts.

SPACE
OPERATIONS
CENTER

NASA

SOC-1524

Summary of Findings

SOC Phase A Extension

BOEING

- Mission models for the SOC time period are dominated by commercial and DoD requirements.
- SOC mission needs validated
  - Correlated with national goals
  - Initial emphasis on applications science and technology
  - Evolution to major operations support role: satellite servicing; spacecraft assembly, test, and checkout; orbit transfer stage basing
  - Cost/benefit ratio appears favorable
- Evolutionary program best fit to mission needs
  - Initial need for 4 people
  - Grows to 12-20 by the year 2000
- Initial configuration uses a single module configuration
  - Outfitted as habitable service module and resupply module
  - Habitat module for growth
- Modular approach offers system versatility

MISSION MODELING APPROACH

Three mission models were created for this analysis. The low model employed highly conservative projections, the median model was intended as most likely projections, and the high model represents optimistic projections. It could be regarded as a maximum credible projection of future space activity short of national commitment to a major space industrialization project.

SPACE OPERATIONS CENTER

NASA

SOC-1245

Mission Model Philosophy

BOEING

LOW MODEL – HIGHLY CONSERVATIVE PROJECTIONS

- NASA RESEARCH: CONTINUED GRADUAL DECLINE IN REAL BUDGET AUTHORITY
- COMMERCIAL: LESS GROWTH THAN PRESENT
- DOD: CESSATION OF HISTORICAL GROWTH TRENDS

MEDIAN MODEL – MOST LIKELY PROJECTIONS

- NASA RESEARCH: ROUGHLY CONSTANT REAL BUDGET AUTHORITY
- COMMERCIAL: CONTINUATION OF PRESENT TRENDS
- DOD: CONTINUATION OF PRESENT TRENDS

HIGH MODEL – OPTIMISTIC PROJECTIONS

- NASA RESEARCH: GRADUAL INCREASE IN REAL BUDGET AUTHORITY
- COMMERCIAL: MODEST INCREASE IN PRESENT GROWTH RATE
- DOD: INCREASE IN PRESENT GROWTH RATE

MISSION MODEL SECTORS AND SOC UTILITY

The mission model development was based on economic and budget considerations. Accordingly, the mission model was divided into sectors having different economic considerations. The utility of the Space Operations Center for these different sectors also tends to be different. A summary of the sectors, their principal economic considerations, and SOC utility is shown on the facing page.

A portion of the mission model was devoted to NASA Research and Applications spacecraft. These fall into categories of astrophysics, planetary missions, Earth and Sun physics, and so forth. They are characterized by institutionalized funding. For these missions, SOC utility includes satellite servicing and transportation support. The second sector was applications science and technology missions than can be conducted on a manned space station. This is a new sector inasmuch as the United States presently does not have such a facility. The Space Operations Center would accommodate these missions and in certain instances would provide frequent satellite servicing to systems such as automated materials processing platforms. The next sector was comprised of commercial applications, including space communications and commercial production of materials. These sectors are characterized by rapid exponential growth and would be serviced by the SOC for transportation support and in certain cases for satellite servicing. The defense sector in these mission models was comprised of DoD spacecraft, except that in the high model, a small military space station was assumed. The economic considerations for defense include considerations of world balance of power and military threats. The SOC utility for these missions was in the form of transportation support.

SPACE OPERATIONS CENTER

Mission Model Sectors and SOC Utility

NASA — BOEING

SOC-1550

SECTOR	ECONOMIC CONSIDERATIONS	SOC UTILITY		
		ACCOMMODATE MISSION	SATELLITE SERVICING	TRANSPORTATION SUPPORT
RESEARCH & APPLICATIONS SPACECRAFT	INSTITUTIONALIZED FUNDING		X	X
MANNED PLATFORM APPLICATIONS SCIENCE & TECHNOLOGY	NEW SECTOR	X	X	
COMMERCIAL APPLICATIONS	EXPONENTIAL GROWTH		X	X
DEFENSE SPACECRAFT	BALANCE OF POWER AND THREATS			X

SUMMARY OF THE MISSION MODELS
DELIVERY OR SERVICING EVENTS

The facing page compares the three mission models in terms of the flight delivery or servicing events per year. This chart illustrates the relative activity level of the three models and brings out the fact that the models are dominated by commercial and military mission applications.

SPACE OPERATIONS CENTER

Summary of the Mission Models : Delivery or Servicing Events

NASA SOC-1565 BOEING

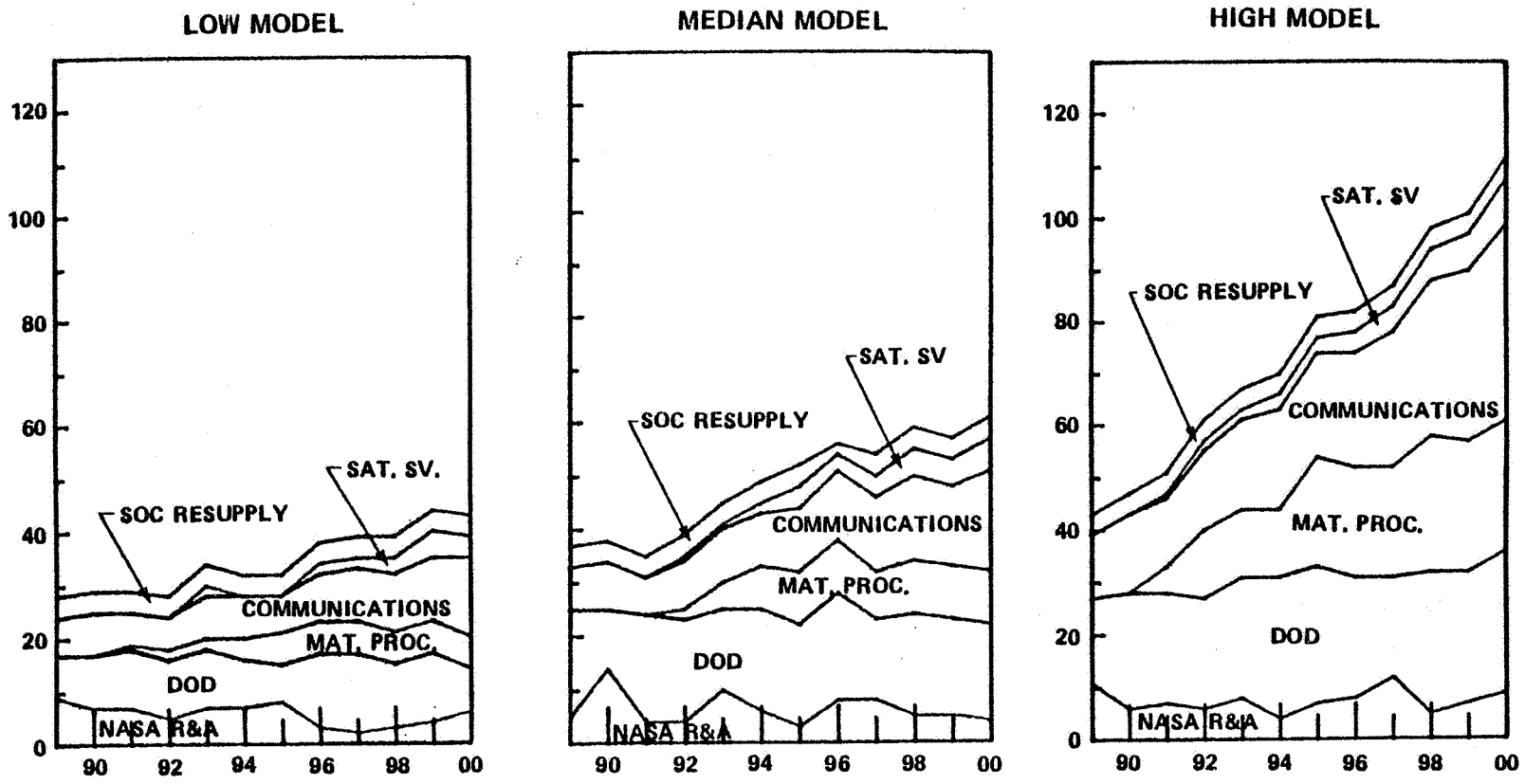

MATERIALS PROCESSING CREW ACTIVITY MISSION MODEL

In addition to flight events, it was necessary to model the manned space station application science and technology missions in terms of the number of flight crew devoted to conducting these missions. These missions include delivery events involving delivery of experiments or equipment, plus the crew activities required to operate the equipment and carry out the experiments or development activities. An example of the crew activity part of these mission models is shown on the facing page for the materials processing models.

SPACE OPERATIONS CENTER

NASA

SOC-1446

Materials Processing Mission Model

BOEING

		CALENDAR											
		89	90	91	92	93	94	95	96	97	98	99	00
LOW	NUMBER OF PROCESSES IN DEVELOPMENT						1	1	1	1	1	1	1
	RESEARCH MAN LEVEL	0.1	0.1	0.25	0.25	0.25	0.25	0.25	0.25	0.25	0.25	0.25	0.25
	DEVELOPMENT MAN LEVEL						2	2	2	2	2	2	2
MEDIAN	NUMBER OF PROCESSES IN DEVELOPMENT				1	1	2	2	2	2	2	2	2
	RESEARCH MAN LEVEL	0.1	0.1	0.1	0.5	0.5	0.5	1	1	1	1	1	1
	DEVELOPMENT MAN LEVEL				1	1	2	2	2	2	2	2	2
HIGH	NUMBER OF PROCESSES IN DEVELOPMENT			1	1	2	2	4	4	4	4	4	4
	RESEARCH MANLEVEL	0.25	0.25	1	1	2	2	2	2	2	2	2	2
	DEVELOPMENT MAN LEVEL			2	2	2	2	4	4	4	4	4	4
	PRODUCTION MAN LEVEL (FREE-FLYER TENDING)										0.5	0.5	0.5

SUMMARY OF FINDINGS
APPLICATIONS SCIENCE AND TECHNOLOGY

The main requirements found in this section were for practical applications: (1) Life sciences research is directed towards effective and safe long duration crew operations in space. This activity is significant both to NASA and defense applications of manned space technology. (2) Materials processing research and materials process development promises an eventual payoff in commercial applications. This is an economically important mission. (3) Instrument and equipment testing is conducted to advance space technology. This class of mission is presently carried out on free-flyers, and will be carried out in the future by shuttle sorties. Many of these missions could be accommodated more effectively on a manned space station.

The payoff of a manned space station for life sciences is the ability to conduct long duration experiments and the experiment flexibility available in a permanent manned facility.

The payoff for materials processing is in the ability to conduct process development in a commercially feasible time period. Process development could be conducted on shuttle sortie flights, but the time required to complete a process development would be so great that commercial investment in these developments would not likely be forthcoming. The ability to automate process development activities, at an acceptable cost, for free-flyer spacecraft is questionable.

The payoff for the instrument and equipment testing activities is more thorough testing at lower cost.

Summary of Findings: Applications Science and Technology

- Practical applications are main requirements for SOC utilization
  - Life sciences for effective and safe long-duration crew operations in space
  - Materials processing research for payoff in commercial applications
  - Instrument and equipment testing for advancement in space technology
- Payoff for life sciences is long duration in the environment and experiment flexibility
- Payoff for materials processing is process development in a commercially-feasible time period
- Payoff for space testing is more thorough testing at lower cost

SOC UTILIZATION ANALYSIS ELEMENTS

The mission models provide forecasts of mission events to be accomplished each year in a U.S. space program. Before the SOC operations analysis could be conducted, it was necessary to convert the mission models into traffic models. Since one of the functions of SOC is to serve as an element of space transportation systems, it is necessary to understand the space transportation requirements imposed by the mission models.

Traffic models were created by determining the space transportation traffic needed to accomplish each of the mission models. With the transportation traffic models created, the SOC operations analysis was then conducted to determine what SOC operations must take place, and what crew skills and man levels are required for a variety of mission models and transportation options.

SPACE OPERATIONS CENTER

NASA

SOC-1537

SOC Utilization Analysis Elements

BOEING

FORECASTS OF MISSION EVENTS TO BE ACCOMPLISHED EACH YEAR

DETERMINATION OF SPACE TRANSPORTATION FLIGHT TRAFFIC REQUIRED TO ACCOMPLISH A PARTICULAR MISSION MODEL, GIVEN ASSUMPTIONS OF SPACE TRANSPORTATION MODES AND CAPABILITIES

DETERMINATION OF SOC OPERATIONS, CREW SKILLS, AND MANNING LEVELS, GIVEN A PARTICULAR MISSION MODEL AND SET OF SPACE TRANSPORTATION MODES AND CAPABILITIES

SOC OPERATIONS SUPPORT SUMMARY

The Space Operations Center will improve space transportation effectiveness in the several ways summarized on the facing page. The payoff of fewer space transportation launches and more reuse of upper stages alone appears to offset the cost of the SOC operations for space transportation support. In addition, the availability of an SOC will result in less time on orbit for space shuttles, thus very likely reducing fleet size requirements. It will decouple launch and upper stage operations and provide smoother operations for launch systems. Finally, it will reduce the number of shuttle flights required for certain kinds of missions such as satellite servicing and space construction because the space operations support equipment needed is left in space at the Space Operations Center and need not be carried up and down.

We found that the orbit transfer vehicle should be an advanced technology system. The highest leverage was obtained through aerobraking. Space basing offers additional leverage and should be accomplished when funding permits. The difference in numbers of launches required between an all propulsive ground-based orbit transfer vehicle and an aerobraked space-based orbit transfer vehicle was approximately 40%.

The space transportation demand for these mission models is moderate. If one assumes that from 1990 on the shuttle orbiters can be operated on a one month turnaround, only the high mission model exceeds a five orbiter fleet capability by the year 2000.

The final conclusion from the operations analysis was that most of the shuttle flights operate volume-limited. Accordingly, faster turnaround for the orbiter is more important than improving its payload beyond the specified 65,000 pounds.

SPACE OPERATIONS CENTER

NASA

SOC-1530

SOC Operations Support Summary

BOEING

- Improves space transportation effectiveness
  - Fewer launches
  - Less time in orbit
  - More reuse of upper stages
  - Decouples launch and upper stage operations
  - Space operations support equipment stays in space
- OTV should be advanced technology
  - Aerobraked
  - Space-based when funding permits
- Space transportation demand is moderate-only high mission model exceeds 5-orbiter fleet capability by the year 2000.
- Faster turnaround more important than improving payload beyond 65,000 lb.

TOTAL SPACE TRANSPORTATION DEMAND FORECAST

The automated analysis did not process WTR launched payloads inasmuch as it is presently not expected that these would be involved in SOC operations. To complete the picture for the space transportation analysis, the WTR launches were included in a total space transportation demand forecast. The demand forecast for the three models is presented on the facing page. This forecast assumes that space-based aerobraked OTVs are employed and that ET scavenging is implemented.

The total demand forecast for the low and median models is quite similar because the space transportation systems are used somewhat more effectively in the median models. There are more opportunities for payload grouping; on the average, the payloads are somewhat larger. The high model reflects a rapid growth in space transportation demand approaching 100 shuttle flights per year by the year 2000.

The high model represents a scenario in which extensive commercial investments in space activities would occur along with a significant level of military operations. An assumption consistent with the high model scenario is one that would presume a development of a second generation space transportation system by the middle 1990s.

SPACE OPERATIONS CENTER

NASA

SOC-1543

Total Space Transportation Demand Forecast (Aerobraked OTV)

BOEING

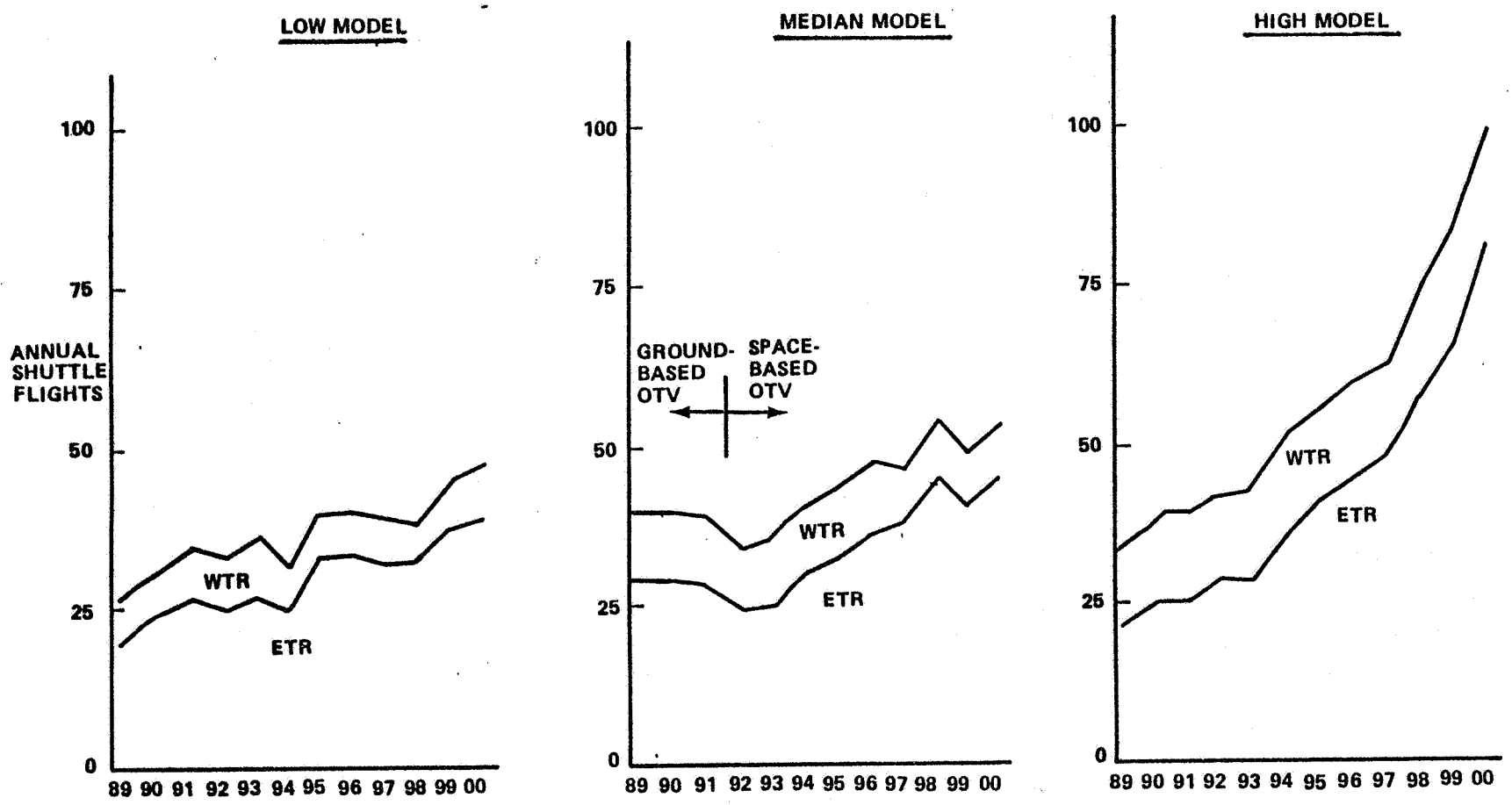

NOTE: THIS DEMAND FORECAST ASSUMES:

1) TRANSITION TO SPACE-BASED OTV IN 1992
2) ALL OTV's ARE AEROBRAKED
3) ET SCAVENGING IS IMPLEMENTED FOR SPACE-BASING

EVOLUTIONARY GROWTH IN SOC CREW REQUIREMENTS

On the left hand side of the facing page, three OTV operational modes are compared. All of these assume an aerobraked OTV. The payoff in reduced shuttle flights and OTVs expended for space-basing is shown. The curve labeled "space-based with scavenging" assumes the scavenging of leftover external tank propellants to improve propellant delivery logistics. The ordinate of the curve is the sum of annual shuttle flights and OTVs expended. This is used as a rough order of magnitude cost indicator.

The right hand side of the chart shows the requirements for SOC crew based on the median traffic model for the ground-based and space-based OTV cases. The evolutionary program approach described in our conclusions assumes that the OTV would be operated ground-based for the first four years of the program. During this time a crew of four on the Space Operations Center would be sufficient. In the fifth year, a transition to space-based operations is made with a consequent jump in crew requirements to roughly 10. This mode of operations is continued for a few more years until continuing growth in crew requirements warrants the establishment of a second Space Operations Center. At this point, one Space Operations Center would be devoted entirely to operations support, and the second devoted entirely to applications science and technology. As will be seen in the body of the briefing, a transition at approximately this time is also warranted because the ability of the first SOC to support growing power demands for applications science and technology becomes marginal. It is at that point beneficial to establish a second station exclusively for these missions.

SPACE OPERATIONS CENTER

OTV Basing: Space vs Ground

(Median Traffic Model)

NASA — BOEING

SOC-1515

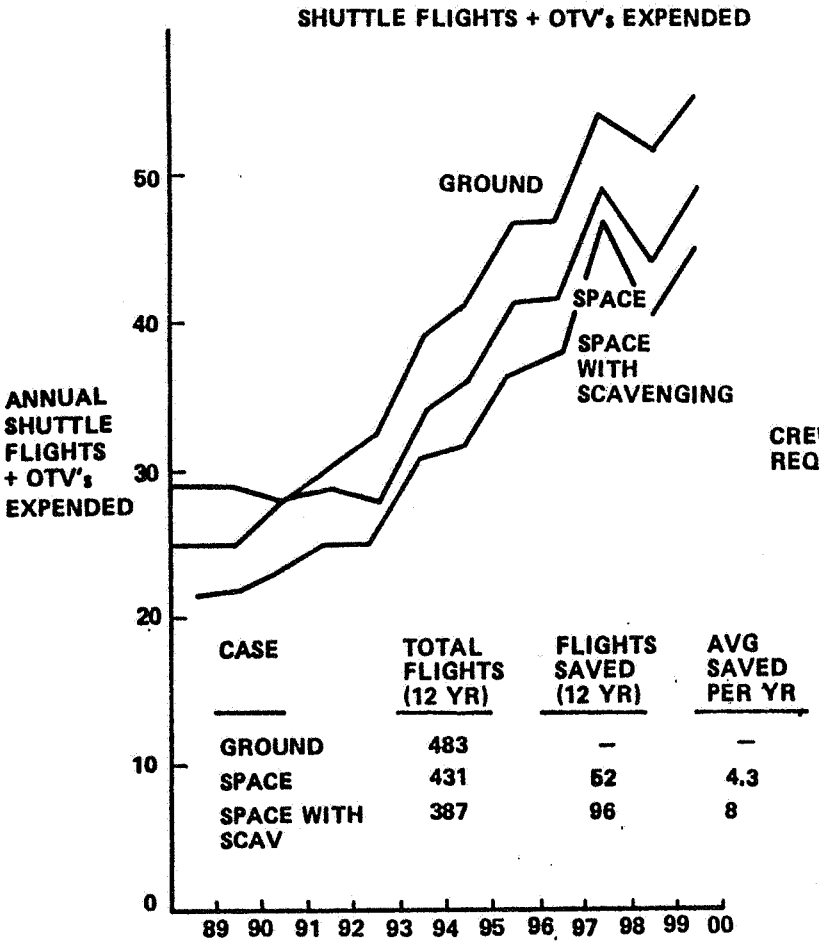

CASE	TOTAL FLIGHTS (12 YR)	FLIGHTS SAVED (12 YR)	AVG SAVED PER YR
GROUND	483	–	–
SPACE	431	52	4.3
SPACE WITH SCAV	387	96	8

SPACE-BASING SAVES 52 @ $40M = $2.081B

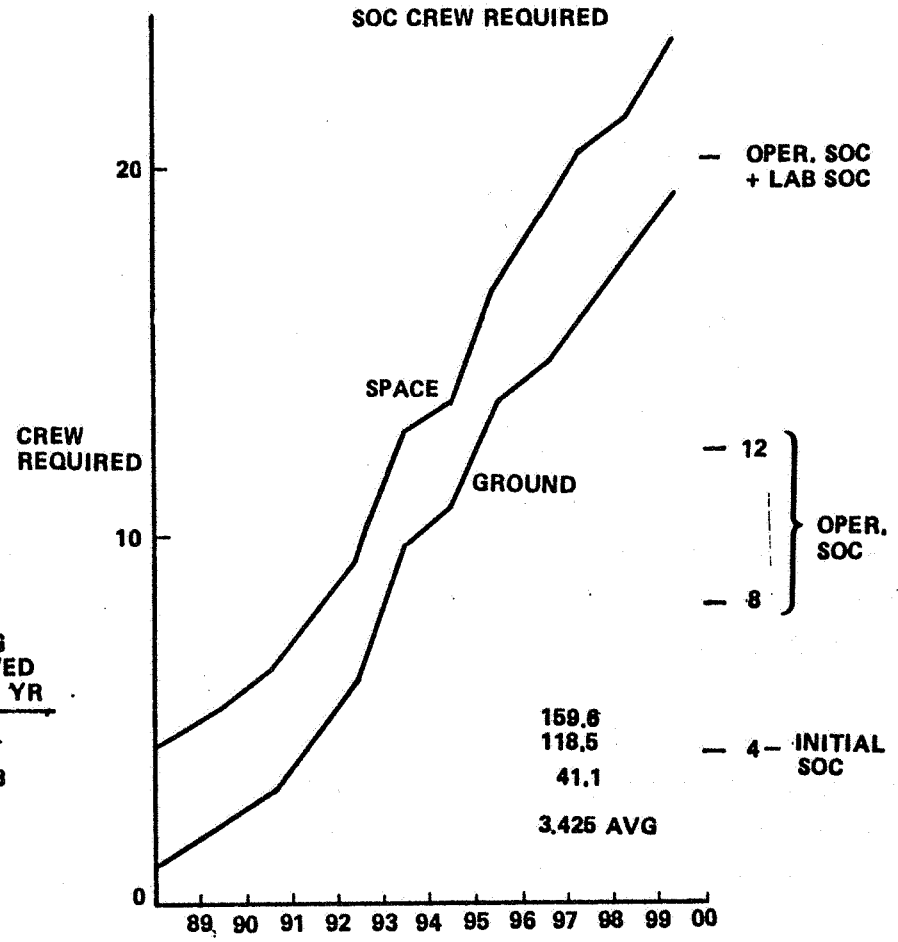

SPACE-BASING COSTS:
3.425 AVG EXTRA CREW X 12 YR X 312 WORK-DAYS/YR
X $130K/MANDAY = $1.67B

SPACE SHUTTLE MANIFESTING OPTIONS

On the left is shown the ground-based OTV manifesting logic. Whenever possible, a payload is manifested with its own OTV in a shuttle flight. In such an instance, SOC operations are not required unless the payload requires some sort of servicing from an SOC (such as construction). If necessary, the OTVs and payloads are manifested separately, in which case these OTVs and payloads go through the grouping logic to improve transportation manifesting whenever possible.

The center diagram shows the space-based manifesting logic that was used in the earlier part of the SOC study. This logic loaded all payloads into the holding array, manifested payloads together whenever possible, and then completed the year's flights by loading enough tankers to provide the propellant required for the year's missions. This manifesting mode turned out to be relatively inefficient inasmuch as the manifesting of payloads together ordinarily resulted in volume-limited rather than mass-limited flights.

On the right hand we show an improved space-based manifesting logic. Shuttle center of gravity constraints will allow approximately 20,000 pounds of payload to be loaded in the front of the shuttle payload bay if a reduced-capacity tanker is placed in the back of the payload bay. Approximately the same payload is allowable whether the tanker is full or empty. Accordingly, a short tanker was designed with a propellant capacity of about 40,000 pounds. The manifesting logic manifests as many payloads with this short tanker as can be so manifested within the payload bay length and mass limits available. Those payloads that cannot be so manifested are then grouped together for additional shuttle flights. Finally, any full-capacity tankers that may be necessary to bring up the balance of propellant required are manifested.

In either of the space-based cases, propellant scavenging from the ET reduces the number of shuttle flights by about 10%. Propellant scavenging can be used to increase the mass loading of either the short tanker or the full tanker. In addition, when payloads manifested together have space available in the back of the payload bay for a small catch tank set, additional propellant can be brought up on payload flights.

SPACE OPERATIONS CENTER

Space Shuttle Manifesting Options

NASA — BOEING

SOC-1572

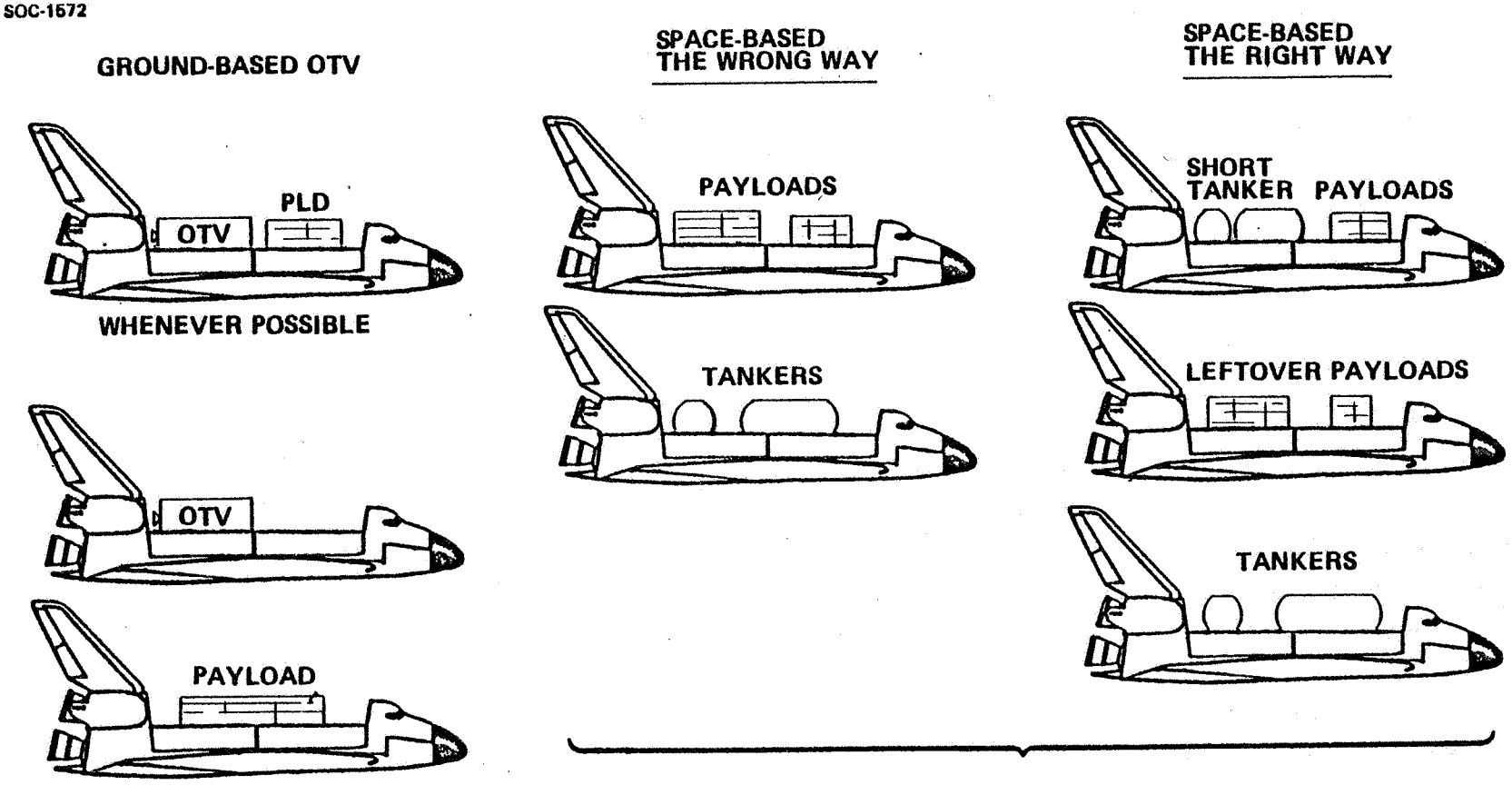

IN EITHER INSTANCE, PROPELLANT SCAVENGING FROM ET REDUCES NUMBER OF SHUTTLE FLIGHTS BY ABOUT 10%

MEDIUM MISSION MODEL

The crew size requirements for the Medium Mission Model (Space-Based Aerobraked OTV) is shown in the facing chart. This figure shows that the crew size requirements vary from 4.75 to 23.3 people over the 12-year time span.

From 1989 through 1991, the crew size is primarily determined by the flight support/construction missions with the science and applications missions contributing more and more workload. In 1992, the first satellite servicing missions come into play. By 1993, the science and applications missions begin to demand as much crew time as the flight support/construction missions. From 1994 through 1997 the science and applications missions workload predominates. From 1998 through 2000, the flight support/construction missions begin to predominate again. The satellite servicing workload steadily increases over the years but its overall workload demands are an order of magnitude less than the other two mission categories' workloads.

As can be seen from this chart, it looks like it would be desirable to employ a second SOC to pick up the science and applications missions about 1995. This would allow the original SOC to comfortably handle the flight support/construction missions and satellite servicing missions with 8 to 12 people.

It is seen that the EVA Worker skill is always the most predominantly required skill. The IVA Operator skill is in second place until the Materials Specialist and Life Sciences Specialist skills begin to predominate (about 1992) as the science and applications missions begin to predominate. The EVA Cherrypicker Operator skill ranks third place in the first two years, but drops back to fourth to sixth place as the years progress.

SPACE OPERATIONS CENTER

NASA

SOC-1521

1993 Crew Skills Requirements— Medium-Mission Model

Spacebased Aerobraked OTV's

BOEING

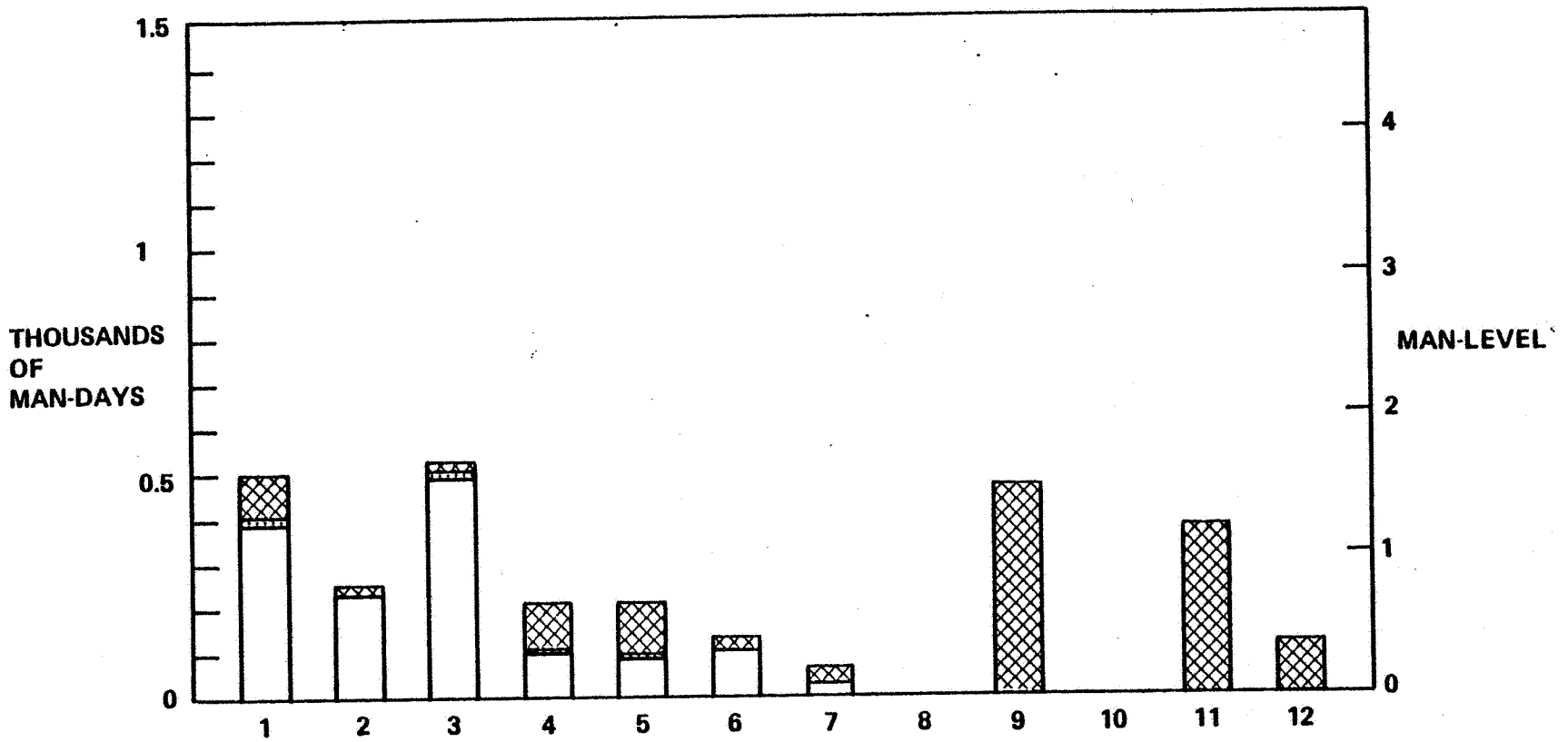

Legend:

- Construction and flight-support operations
- Satellite servicing
- Science and applications

1. IVA operator
2. EVA operator (CP)
3. EVA operator (workstation)
4. Test and checkout engineer
5. Electrical-mechanical engineer
6. Propulsion-fluid specialist
7. Flight control-systems engineer
8. Pilot
9. Materials specialist
10. Visitor
11. Life sciences specialist
12. General

820063-036

SATELLITE SERVICING SUMMARY

We found that satellite servicing operations could be subdivided into three types of satellites. The first are those that are controlled and serviced by the Space Operations Center. Presently, only materials processing free-flyers fall into this category. Here the motivation for Space Operations Center control is (1) to ensure frequent servicing capability (2) to allow high data rate requirements (for real time color TV coverage of experiment operations) to be carried on the short line-of-sight link between the satellite and the Space Operations Center.

The second category includes those satellites that would be serviced on demand by the Space Operations Center (possibly frequently), but otherwise would be ground controlled. The final category is those that would be occasionally or infrequently serviced by the Space Operations Center, presumably on a scheduled basis. These satellites would include systems like space telescope and the geosynchronous communications satellites.

The satellite servicing analysis considered differential drag, transportation modes and the SOC utilities. These factors are summarized on the facing page.

SPACE OPERATIONS CENTER

NASA

SOC-1551

Satellite Servicing Summary

BOEING

SERVICING AND OPERATIONS REQUIREMENT	DIFFERENTIAL DRAG CONSIDERATIONS	TRANSPORTATION MODE	SOC UTILITY
SOC CONTROLLED & SERVICED	FREQUENT REBOOST TO MAINTAIN LINE-OF-SIGHT COMMUNICATIONS	SELF-PROPELLED (AVOIDS FREQUENT TELEOPERATOR OPERATIONS)	• CONTROL (SHARED WITH GROUND) • REFUEL • SERVICING
ON-DEMAND SOC SERVICE BUT GROUND-CONTROLLED	• SAME AVERAGE ALTITUDE AND INCLINATION • REBOOST MAY BE INFREQUENT	TELEOPERATOR-MANNED VISIT (WITH PRESSURIZED CAB) OR SATELLITE RETRIEVAL	• CONTROL PROXIMITY OPERATIONS • TELEOPERATOR OPERATIONS • SERVICING
OCCASIONAL OR INFREQUENTLY-SCHEDULED SERVICE (LEO OR GEO)	• LEO SATELLITES MAY BE AT HIGHER ALTITUDE AND INCLINATION • SERVICE OPPORTUNITIES AT 6-MONTH TO 1-YEAR INTERVALS	• TELEOPERATOR OR MANNED OTV • VISIT MODE WHENEVER POSSIBLE	• TELEOPERATOR OR MANNED OTV OPERATIONS

TRANSPORTATION INTERFACES SUMMARY

The Space Operations Center interfaces with three transportation system elements. For the shuttle orbiter, we found that preferred docking positions can be selected to minimize plume impingement problems. We also found that occasionally we need a maximum payload bay length. On these occasions, if the mission requirement is delivery of a very long payload, one could employ soft berthing using a handling and positioning aid (HAPA) or RMS, to transfer the payload from the space shuttle to the SOC. If, however, propellant transfer is required on the same mission, hard docking appears necessary. It may be warranted to develop a dedicated orbiter for the Space Operations Center, including a short tanker (to be described) and a docking fixture in the aft cabin to free up the front of the payload bay for payloads.

The interfacing requirements for the orbit transfer vehicle are self explanatory.

Several requirements were found relative to unmanned heavy lift systems. First, because the systems are unmanned, the SOC must control proximity operations for SOC safety. Secondly, the large shuttle-derived heavy lift payload systems will need some propulsion at both ends to provide sufficient control authority for proximity operations prior to berthing. For this reason, it would be desirable for the heavy lift payload assembly systems to accommodate a teleoperator docking fixture at the forward end. In this way, the teleoperator could be used for the forward propulsion system and the SDHLV propulsion unit required for orbit insertion could be used for the aft propulsion unit. Finally, if the SOC is to operate with an SDHLV an additional berthing area is needed to accommodate these operations.

SPACE OPERATIONS CENTER

NASA

SOC-1533

Transportation Interfaces Summary

BOEING

SHUTTLE ORBITER	ORBIT TRANSFER VEHICLE	SHUTTLE-DERIVED HEAVY LIFT VEHICLE
• PREFERRED DOCKING POSITIONS MINIMIZE PLUME PROBLEMS • OCCASIONALLY NEED MAXIMUM PAYLOAD BAY LENGTH • DEDICATED ORBITER PROBABLY WARRANTED CIRCA 1995 • MINI TANKER • DOCKING FIXTURE IN AFT CABIN	• OTV SHOULD BE DESIGNED FOR SPACE MAINTENANCE • HANGARS PROVIDE COLLISION, PLUME, AND THERMAL PROTECTION AS WELL AS MAINTENANCE WORKSPACE • OPERATIONS MUST HANDLE MANNED & UNMANNED OTV'S WITH AEROBRAKES • EFFICIENT ZERO-G PROPELLANT TRANSFER IS ESSENTIAL	• SOC MUST CONTROL PROXIMITY OPERATIONS • SDHLV PAYLOAD ASSEMBLY NEEDS PROPULSION AT BOTH ENDS FOR PROXIMIATY OPS CONTROL AUTHORITY • SDHLV PAYLOAD ASSEMBLY SHOULD ACCOMMODATE TELEOPERATOR DOCKING AT FORWARD END • SOC NEEDS A BERTHING AREA FOR SDHLV

PREFERRED SHUTTLE DOCKING LOCATIONS AND ORIENTATIONS

Tail-up or tail-down docking provides the easiest orbiter maneuver operations and minimizes plume impingement. In some instances this docking attitude may pose difficulties in offloading payloads. If propellant transfer operations are to occur the shuttle should dock to port number 1 or port number 2.

Transverse docking, as illustrated in the figure, provides an opportunity for propellant transfer and ease of payload offloading but decreases the gravity gradient stability of the docked configuration. If the shuttle were docked in this position, some increase in attitude control propellant use is expected.

SPACE OPERATIONS CENTER

Preferred Shuttle Docking Locations and Orientations

NASA

BOEING

SOC-1474

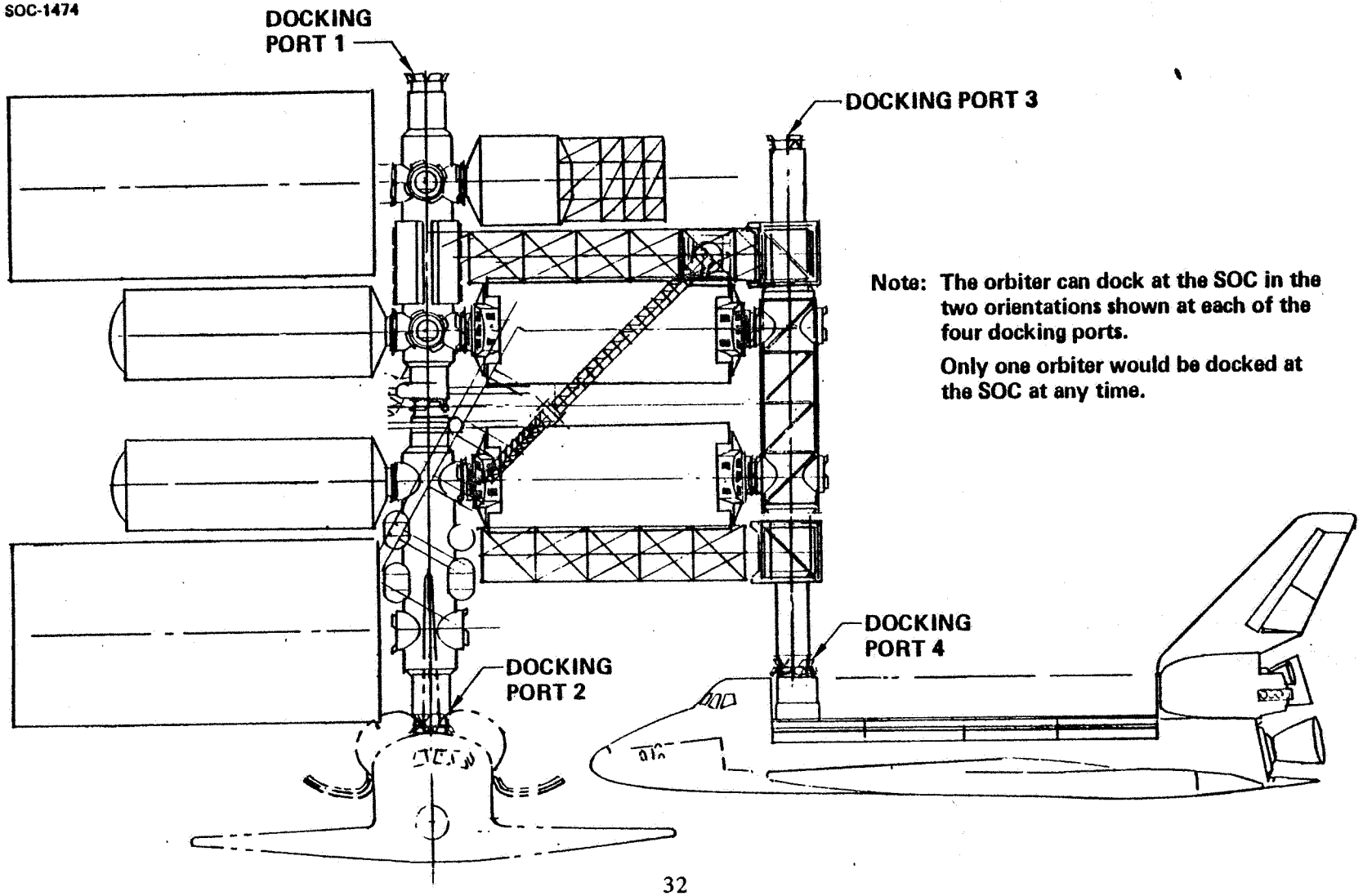

Note: The orbiter can dock at the SOC in the two orientations shown at each of the four docking ports.

Only one orbiter would be docked at the SOC at any time.

820063-44

MINI TANKER CONCEPT

We found that the most efficient way to manifest payloads for a space-based upper stage is to design a short tanker that would be located in the aft section of the shuttle payload bay. The forward section is then available for payloads. This combination allows nearly all flights to be mass limited since the loading of the tanker can be adjusted to compensate for the payload mass.

SPACE
OPERATIONS
CENTER

Minitanker Concept

NASA — BOEING

SOC-1473

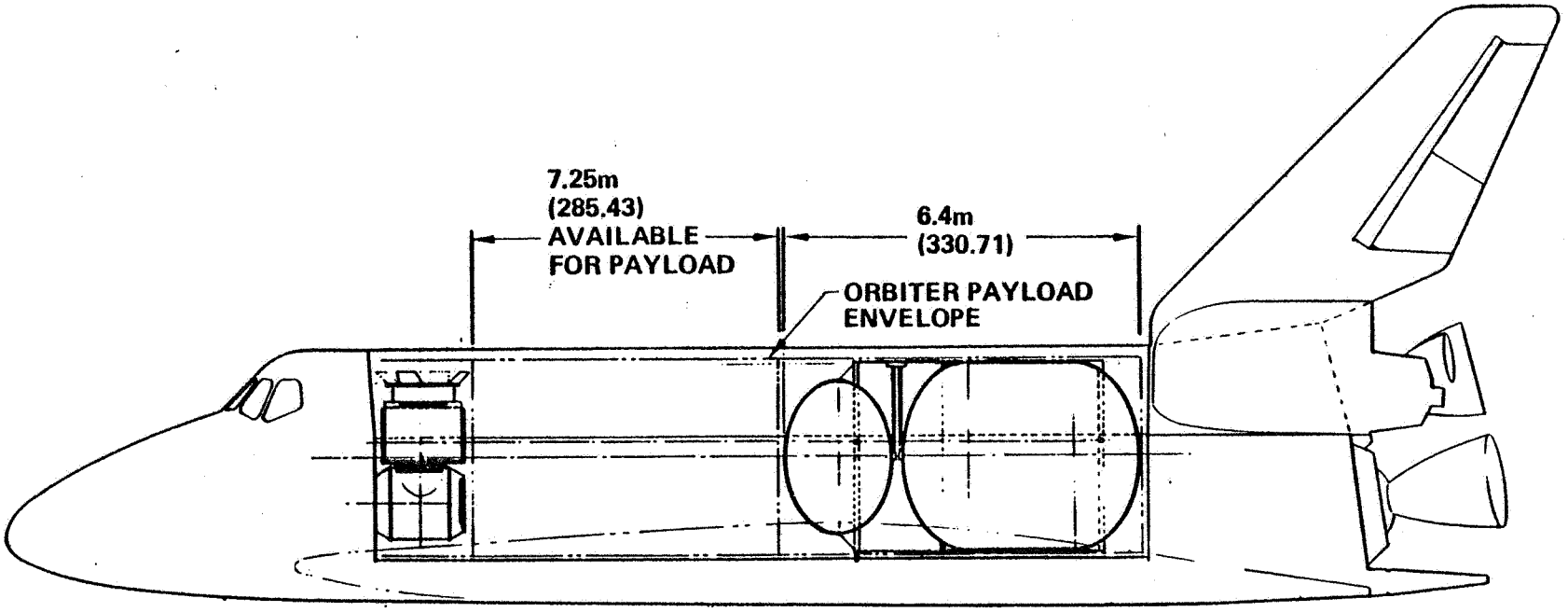

820063-45

HANGAR EQUIPPED FOR OTV TURNAROUND OPERATIONS

The hangar designed from the earlier SOC configurations was modified to simplify it somewhat, provide additional workspace, and simplify the OTV operations inasmuch in that the OTV is always on its transporter when located at the Space Operations Center. Crane operations are not required to remove the OTV from its hangar.

SPACE OPERATIONS CENTER

Hangar Equipped for OTV Turnaround Operations

NASA

BOEING

SOC-1536

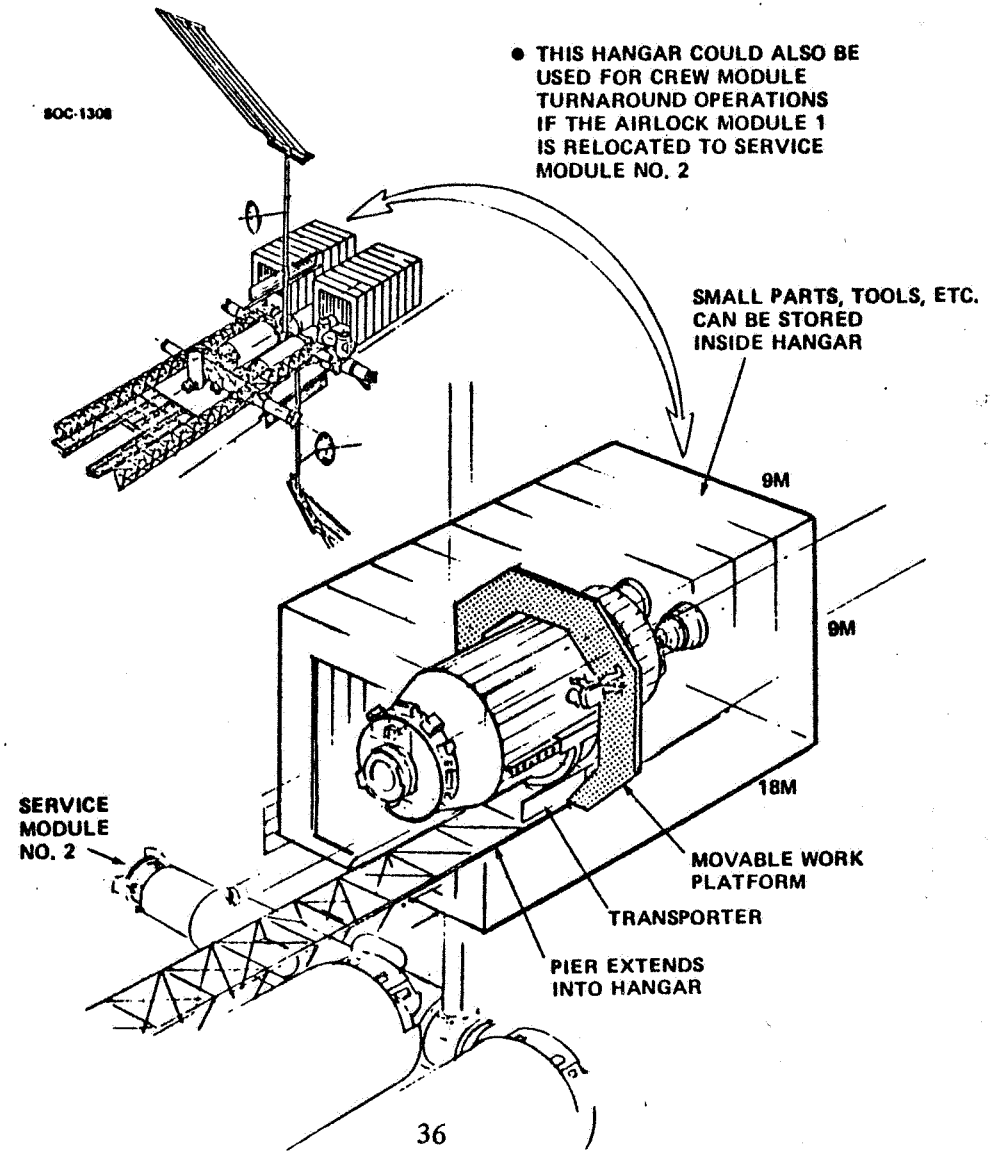

SOC PROGRAM ISSUES

Programmatics analyses for the Space Operations Center in Part 1 and Part 2 of the study found three primary issues. First is a need for flexibility to accommodate alternative uses of the system. These include, in addition to the variety of missions discussed earlier, possible application to high altitude missions as well as high inclination missions. The second need was to carry out an evolutionary development that matches mission needs. We found that initially a crew of four would suffice, growing to 12 to 20 in 10 to 15 years, possibly more if the high traffic model forecasts prove valid. Finally, the nature of the mission needs changes. The initial emphasis is on application science and technology; later emphasis is on operations support and satellite servicing.

Finally, the evolutionary development should be compatible with anticipated funding constraints.

SPACE
OPERATIONS
CENTER

NASA
SOC-1531

SOC Program Issues

BOEING

- Flexibility to accommodate alternative uses
  - Alternate missions
  - High altitude
  - High inclination
- Evolutionary development to match mission needs
  - Initial crew of 4, growing to 12 to 20 in ten to fifteen years
  - Changing nature of mission needs
- Compatibility with probable funding constraints

SPACE OPERATIONS CENTER REFERENCE CONFIGURATION FROM PART 1

Part 1 of the present study developed the configuration shown on the facing page as a reference operational configuration. This configuration consisted of two four-man habitat modules, two service modules capable of supporting some crew in an emergency, a docking tunnel for a connection between the opposite ends of the two habitat modules and to provide additional berthing ports, a mobile equipment handling system including a mobile cherry picker, tracks, and various end effectors, two OTV hangars, and the large solar arrays and communications antennas.

SPACE OPERATIONS CENTER

NASA

SOC-1556

Space Operations Center Operational Configuration

BOEING

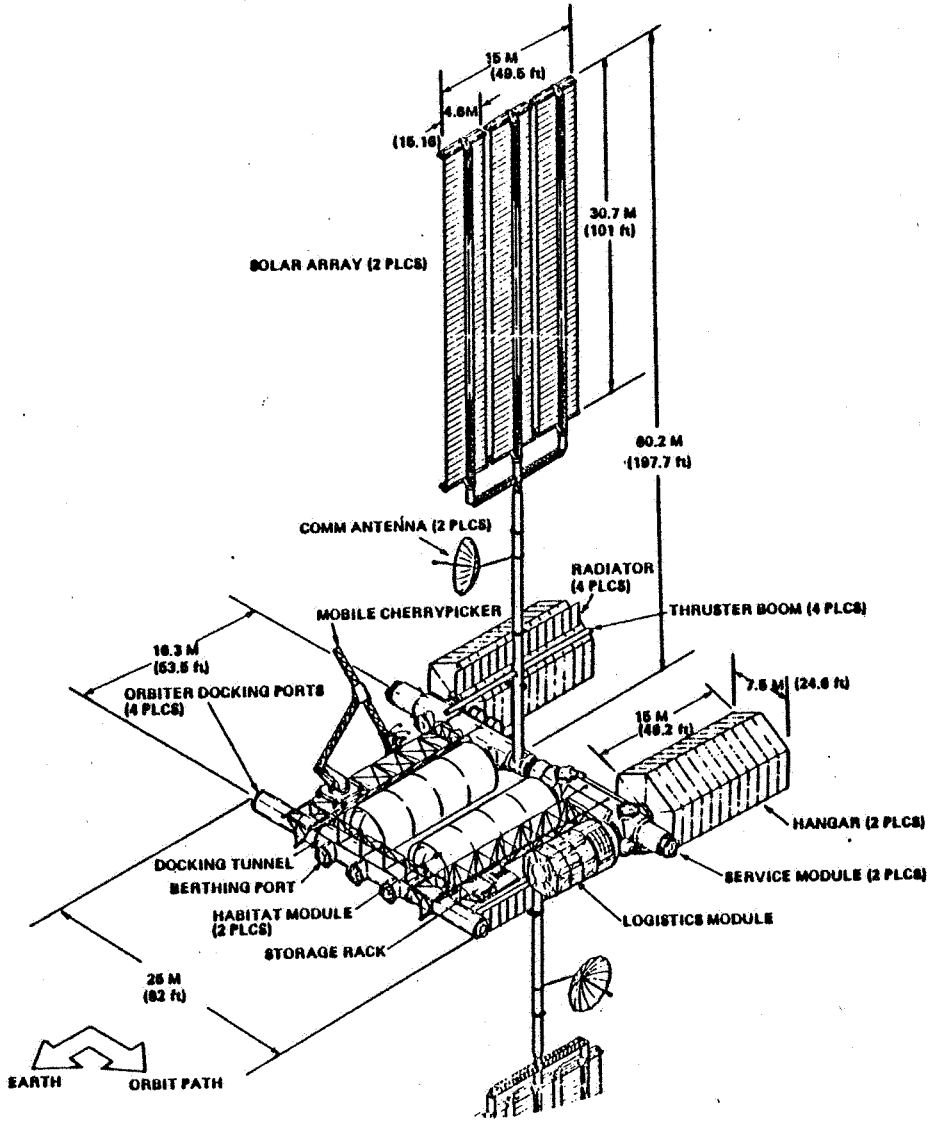

UPDATED OPERATIONAL SOC CONFIGURATION

The Part 1 reference configuration was updated as illustrated here in Part 2. This reflects changes in system requirements including mainly the following: (1) provision of external airlocks as an improvement over the internal airlocks used earlier; (2) simplification of the hangars described earlier; and (3) a portable tunnel for crew ingress and egress from the manned module of a manned OTV.

SPACE OPERATIONS CENTER

NASA

SOC-1535

Operational SOC Configuration

BOEING

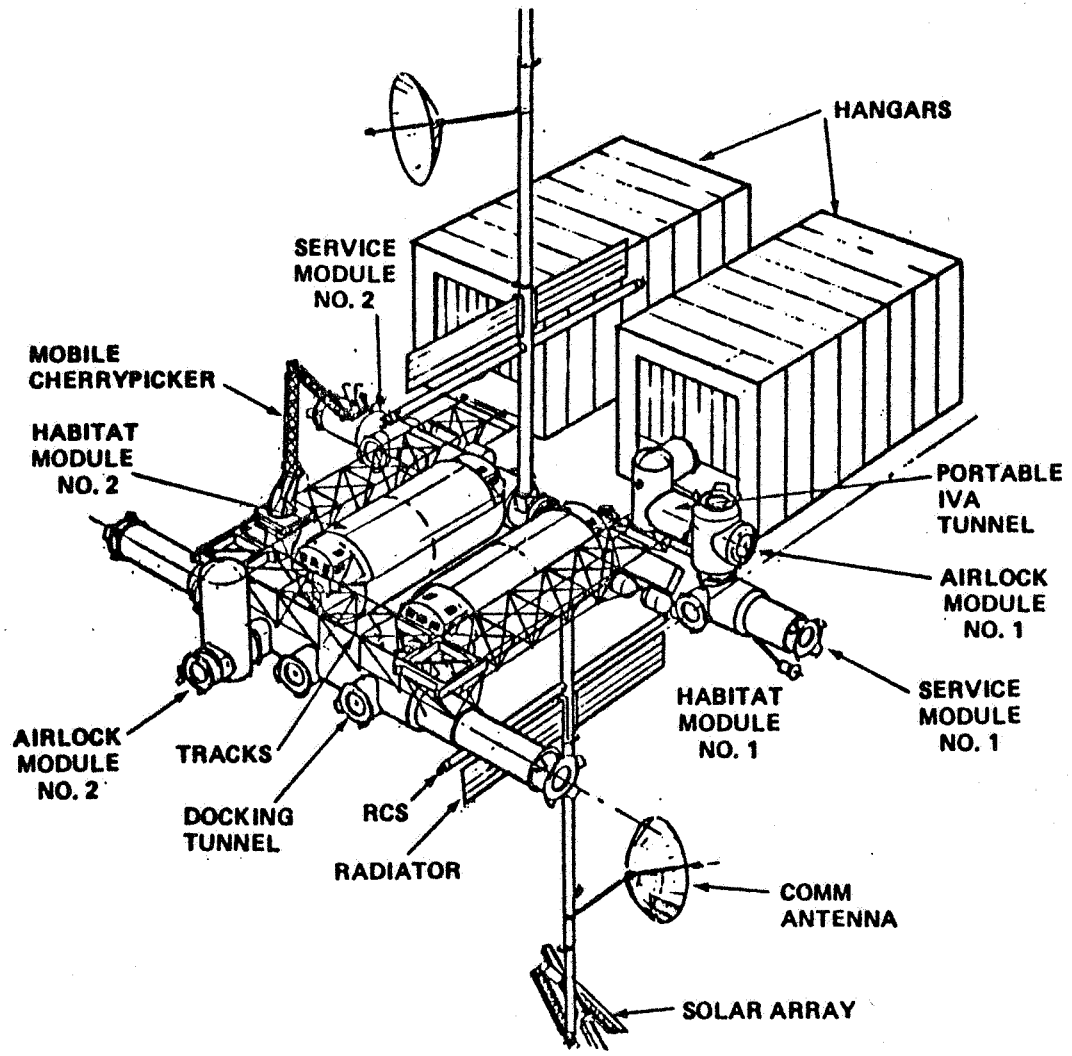

SOC DEVELOPMENT PATH OPTIONS

These development paths were identified for the configurations described on the preceding pages. Both paths are characterized by a need to develop a habitat module and a service module simultaneously in order to provide a four-man SOC configuration.

SPACE OPERATIONS CENTER

NASA — BOEING

SOC-1089

SOC DEVELOPMENT PATH OPTIONS

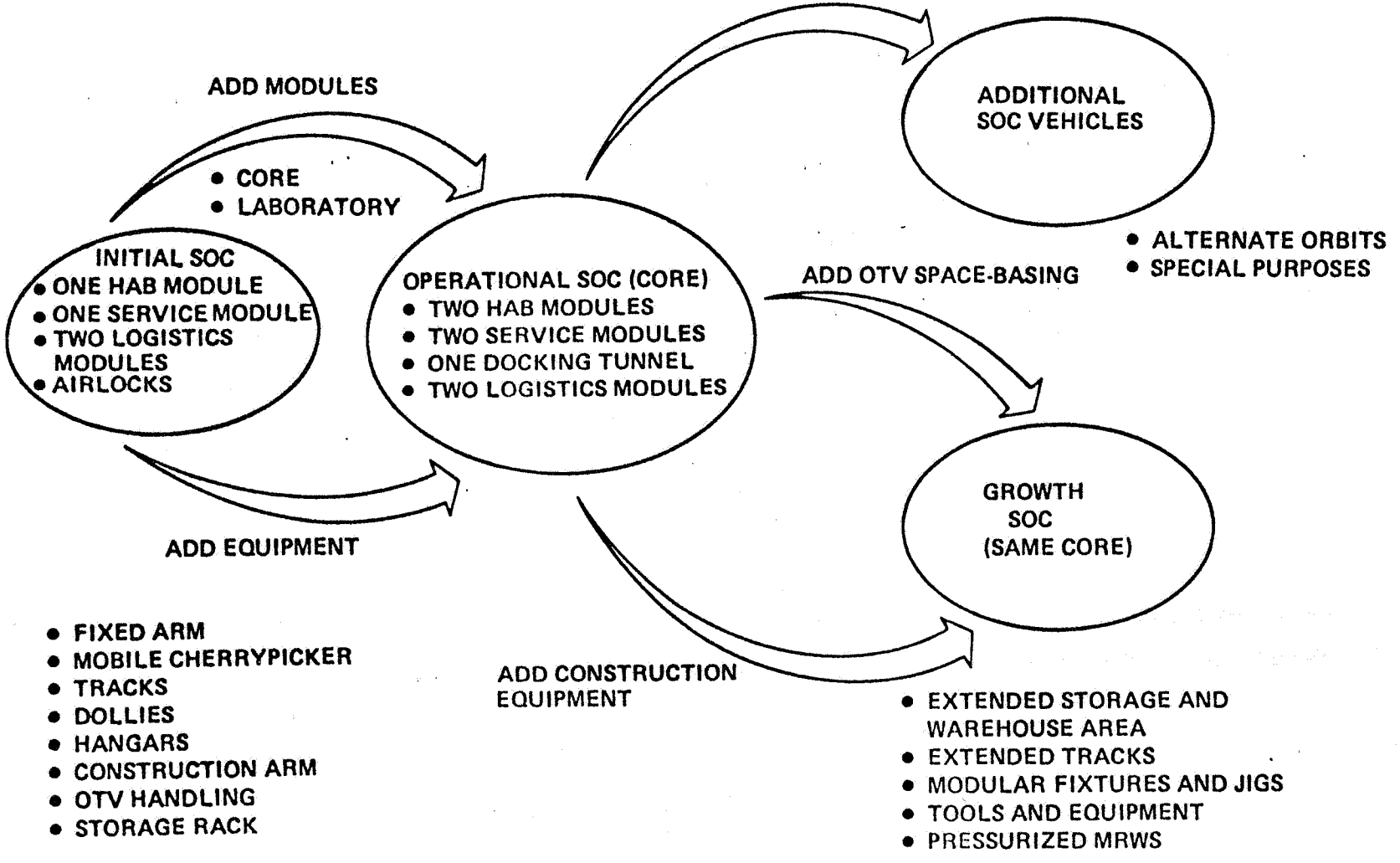

SOC REFERENCE CASE FUNDING REQUIREMENTS

Because of the need for simultaneous development of two major modules, the funding requirements for the reference system rose rapidly and peaked at about 900 million in 1980 dollars. This funding peak in then-year dollars would be nearly twice that figure. This funding peak was seen as not compatible with expected funding constraints.

SPACE OPERATIONS CENTER

NASA

SOC-1100

SOC Reference Case Funding Requirements

BOEING

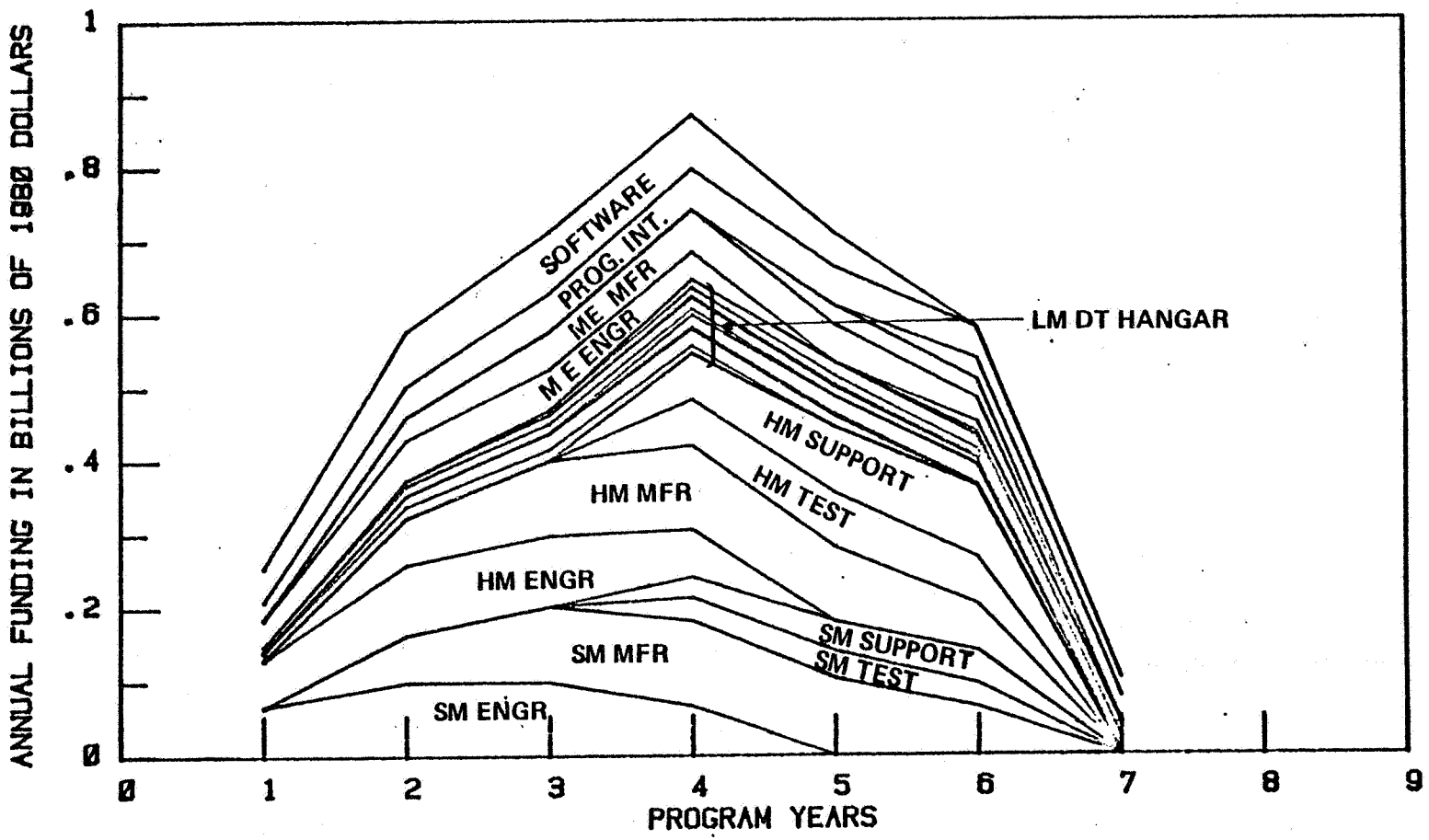

SOC EVOLUTIONARY PROGRAM
DEVELOPMENT FUNDING KEYED TO MISSION NEEDS

If the service module could be modified to provide initial habitability provisions, development of the habitat module could be deferred for several years. This reduces the peak funding requirements by about 25% and also allows the operational configuration to reach a total crew capacity of 12 as compared to 8 for the earlier configuration.

SPACE OPERATIONS CENTER

NASA

SOC-1549

SOC Evolutionary Program

Development Funding Keyed to Mission Needs

BOEING

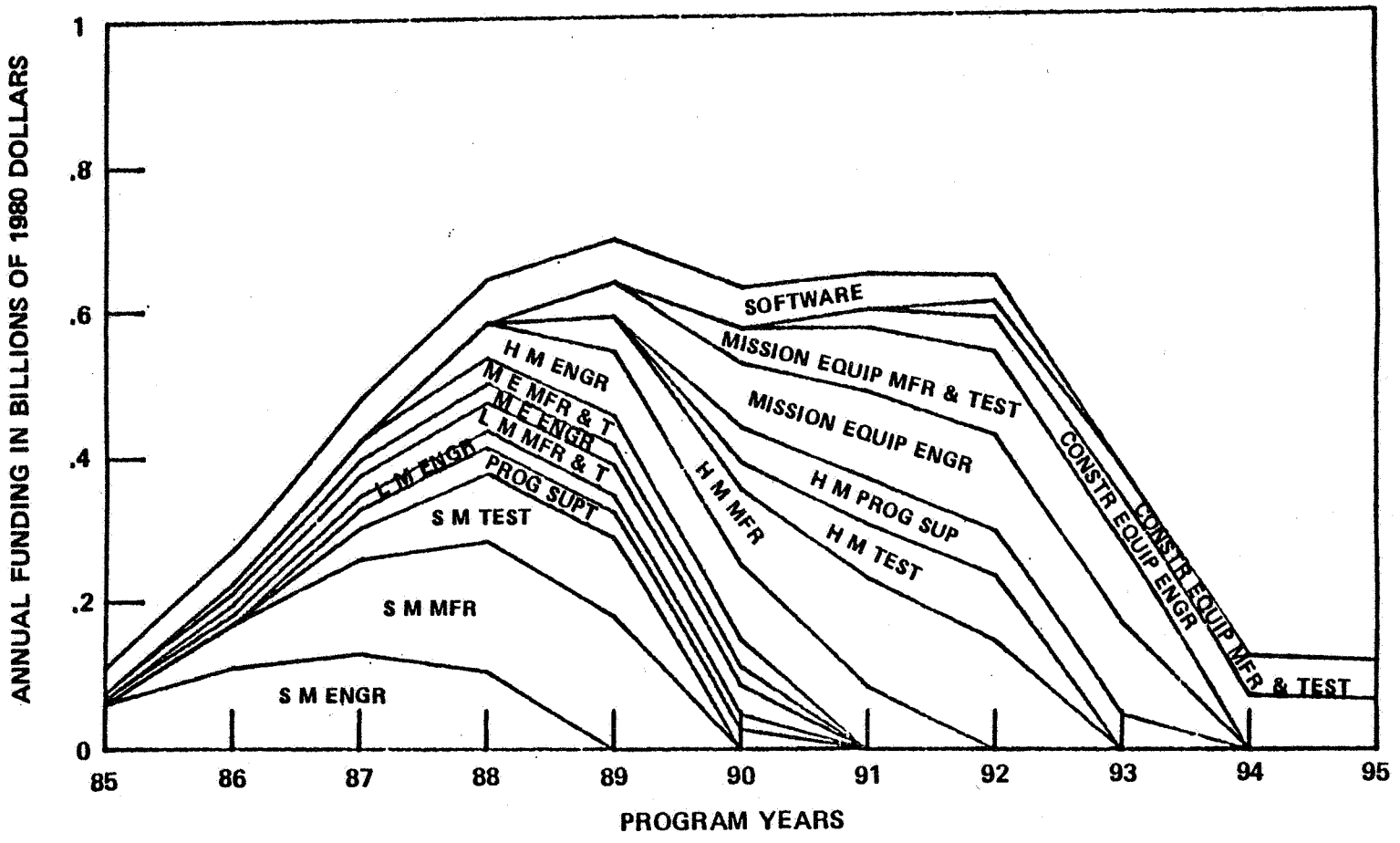

REPRESENTATIVE PATHS FOR EVOLUTIONARY PROGRAM

The recommended initial SOC is comprised of two service modules modified to provide initial habitability provisions. These two service modules will support a crew of four. The same structural pressure element is modified to serve as a logistics module. Potential offshoots of this initial configuration include automated platform systems incorporating some of the SOC subsystems and a minimum station consisting of a single service module and logistics module supporting a crew of two or three.

The recommended approach then grows the initial SOC to a crew capacity of 12 people with the operational support facilities as indicated on the upper right of the chart. A potential interim step provides habitation for six to eight people with the addition of one of the habitat modules. This configuration violates the rule of two escape paths from every module, as does the initial configuration, but this may be permissible for an interim time period. This interim step would be applicable to a situation in which the mission needs for application science and technology grow faster than those for operations support.

An alternate path is illustrated going towards the lower right. This path employs smaller habitability modules, compatible with high-inclination or high-altitude orbits. It uses four of the smaller modules to reach a level of 12 people.

SPACE OPERATIONS CENTER

Representative Paths For Evolutionary Program

NASA BOEING

SOC-1534

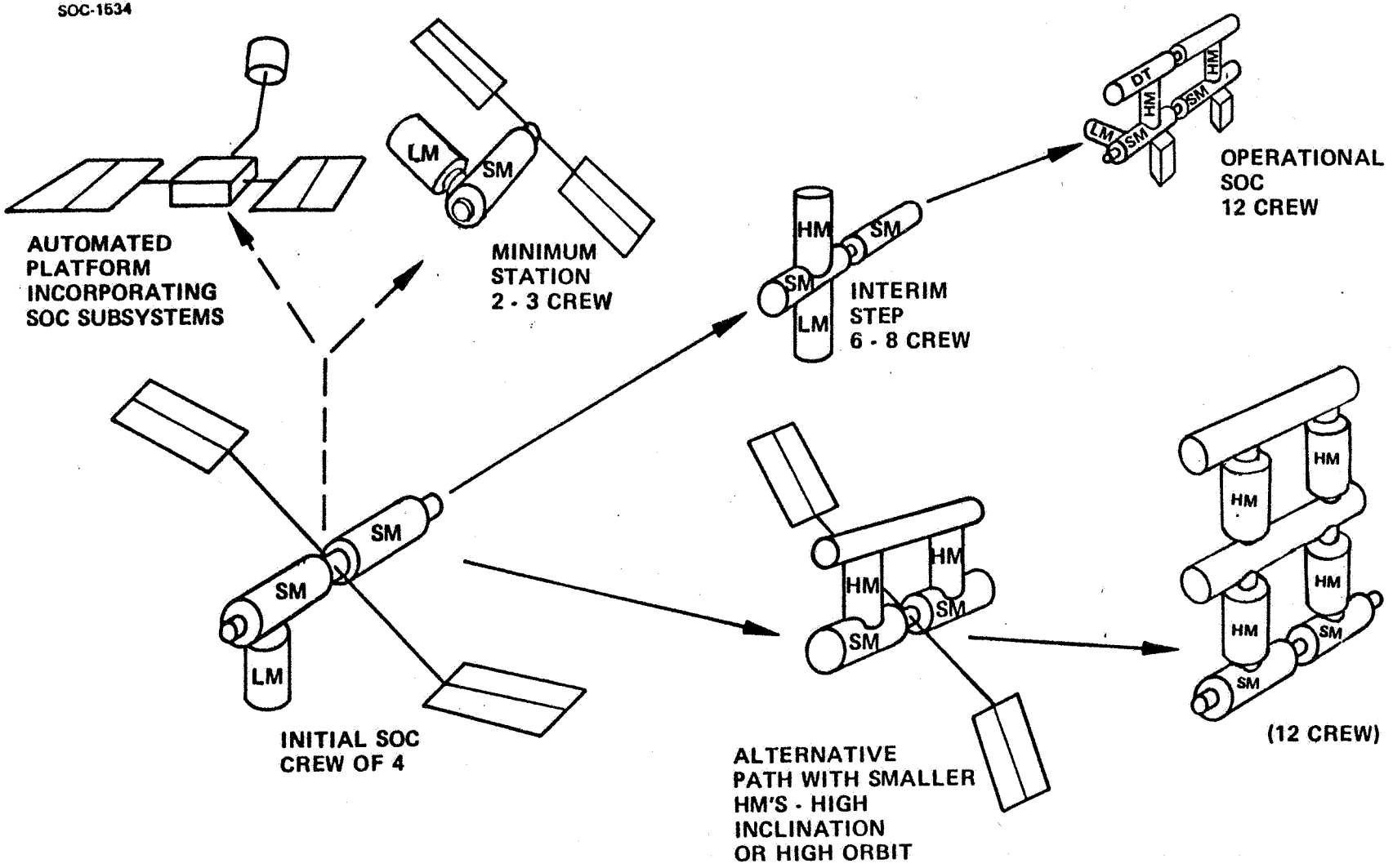

SPACE OPERATIONS CENTER

NASA

SOC-1557

Service Module (Single Boom)

BOEING

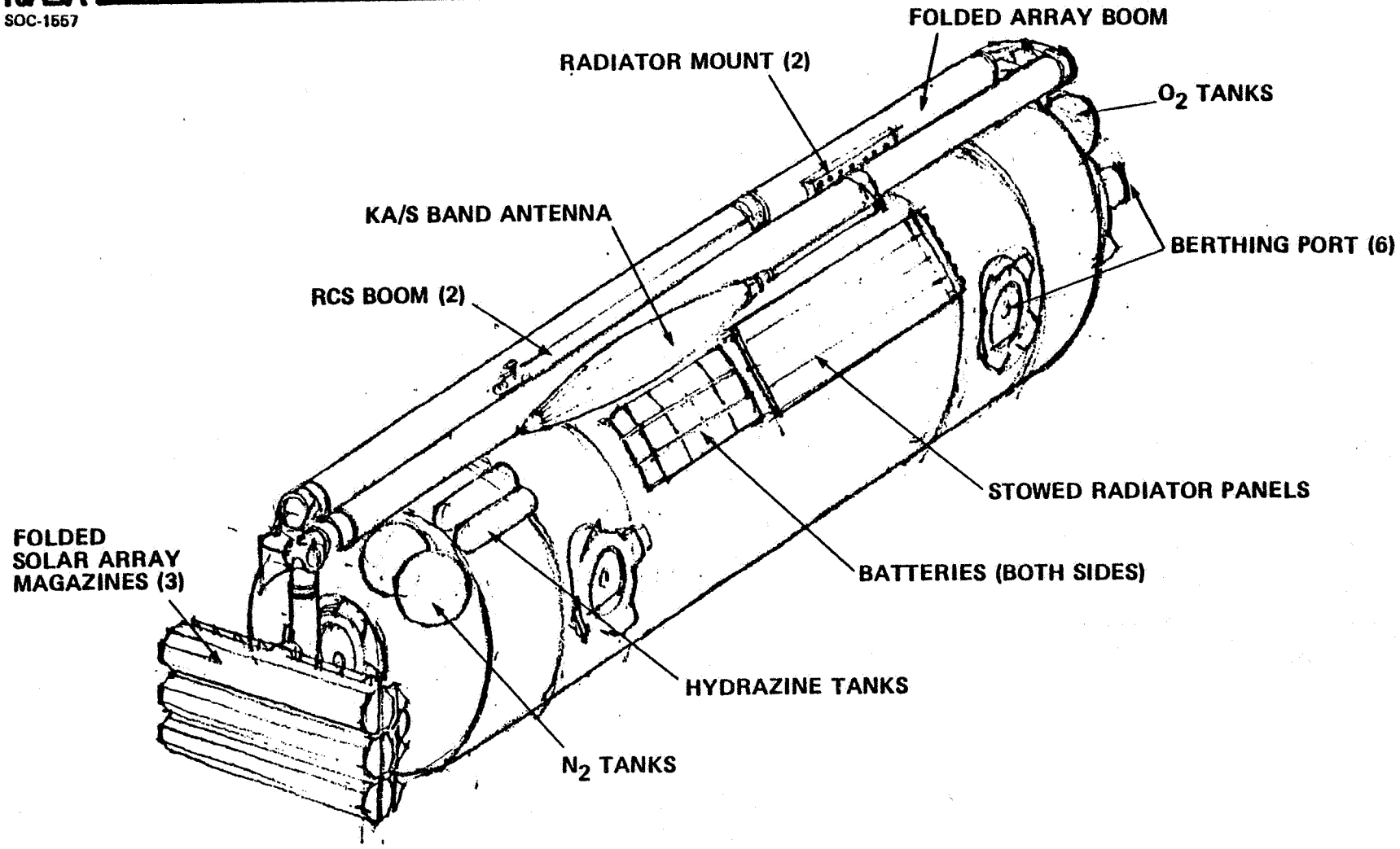

FOUR MAN SOC CONCEPT

The four-man configuration is illustrated in more detail on the facing page. Its mission capabilities include applications science and technology missions, primarily life sciences and suitcase experiments for materials processing. Additional capability for materials processing operations could be provided if a part of the logistics module is initially dedicated to this sort of activity. The logistics module, sized to support a larger station of 8 to 12 people, will have unused volume during this early phase.

A second type of mission is satellite servicing. Thirdly, this configuration can assist the shuttle with ground-based OTV operations in those instances where it is desirable to deliver an OTV payload to the SOC followed by a later delivery of the OTV itself. The initial SOC and the shuttle together, each equipped with an RMS arm, can mate the OTV and the payload for launch to the destination orbit. Finally, this initial configuration provides a shakedown period for SOC ground and flight operations.

SPACE
OPERATIONS
CENTER

4-Man SOC Concept

NASA
SOC-1558

BOEING

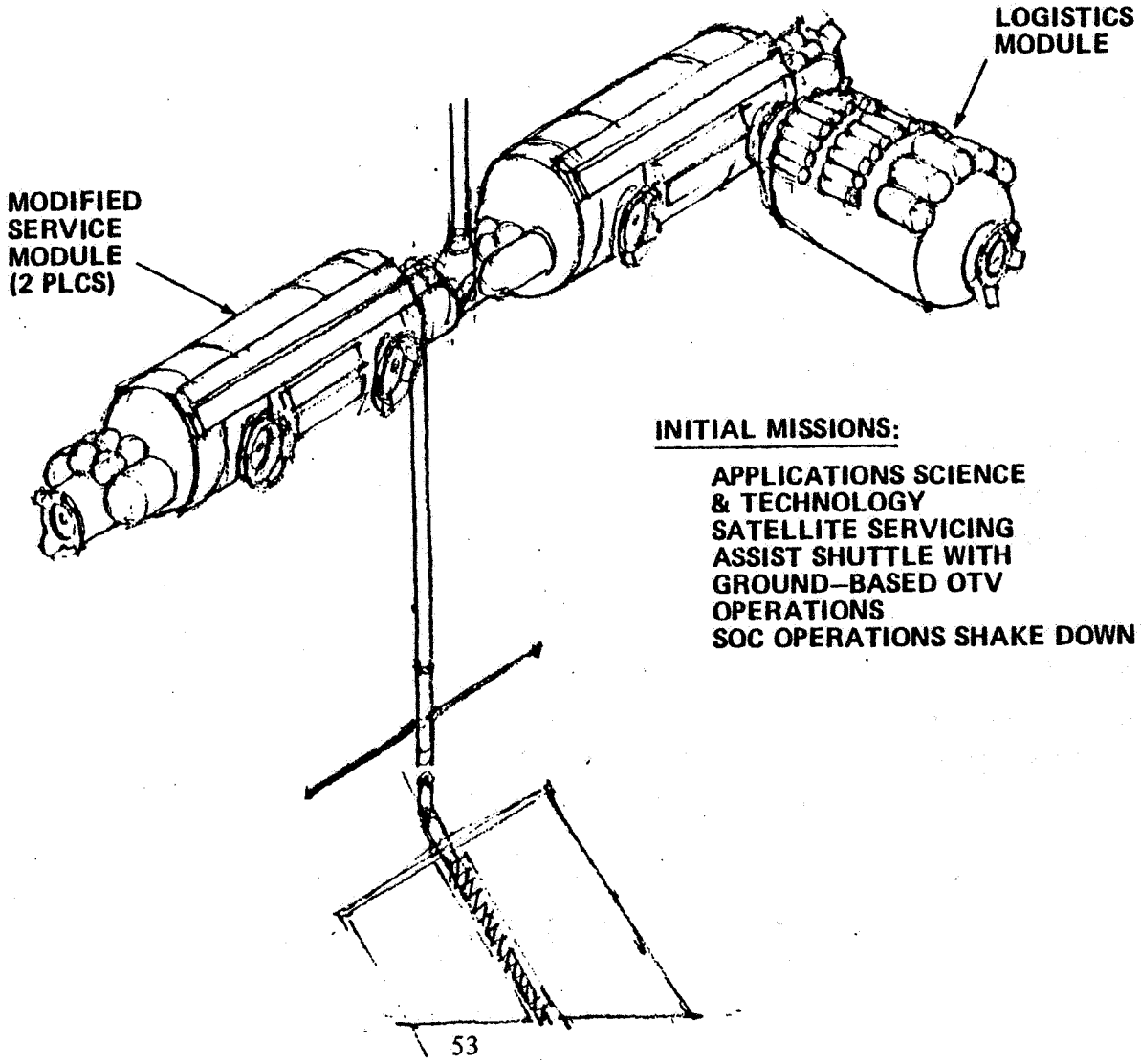

INITIAL MISSIONS:

- APPLICATIONS SCIENCE & TECHNOLOGY
- SATELLITE SERVICING
- ASSIST SHUTTLE WITH GROUND–BASED OTV OPERATIONS
- SOC OPERATIONS SHAKE DOWN

SOC PROGRAM RECOMMENDATIONS

SOC program recommendations are summarized on the facing page. During the pre-phase B period we should complete the investigation of the modular evolutionary concept. The configurations illustrated have not yet been subjected to all of the operations and subsystems analyses needed to fully validate the approach and finalize the design concepts. Secondly, certain technical emphasis areas should be studied during this study activity. The most important ones are indicated on the chart.

The phase B study should encompass the entire system in preliminary design activities while emphasizing the initial modules. All modules should be defined in sufficient details so that specifications can be written and so that additional phase B activities for later modules would not be needed. Finally, since software development is a potential schedule tentpole, the software preliminary design for the initial SOC should be completed during the phase B process.

The modular evolutionary approach is the most promising for the SOC system. This approach should be pursued in subsequent study activities.

The SOC systems should employ advanced technology in the sense of using the latest technology available to maximize the useful life of the SOC systems. Finally, since the SOC can be expected to operate with an advanced technology OTV, the development of the SOC should be coordinated with study and development of an advanced technology OTV in order to maximize the operational compatibility.

SPACE OPERATIONS CENTER

NASA

SOC-1526

SOC Program Recommendations

BOEING

- Pre-Phase B
  - Complete investigation of modular evolutionary concepts
  - Technical emphasis areas: electrical power; data management; flight control and dynamics; communications
- Phase B
  - Cover entire system in preliminary design
  - Emphasize initial modules
  - Complete software preliminary design
- Development
  - Pursue modular evolutionary approach
  - Employ advanced technology
  - Coordinate with development of advanced technology OTV

SOC PROGRAM OBJECTIVES

As a result of the analyses conducted, we have selected the objectives summarized on the facing page as the top-level SOC program objectives.

SPACE
OPERATIONS
CENTER

NASA

BOEING

SOC-1564

SOC Program Objectives

- Establish program for evolutionary development of permanently manned occupancy of low earth orbit.
- Provide for growth to high-energy orbits.
- Satisfy a broad range of applications
  - Applications science and technology
  - Operational support of space transportation system
  - Construction/assembly of large space systems
  - Satellite servicing
  - DoD missions
- Establish initial space station capability based on a single shuttle launched module design

Mission Modeling

OBJECTIVES OF MISSION MODELING

One of the principal issues involved in design and program planning for a manned Space Operations Center is determination of mission needs, and the derivation of appropriate system requirements and program planning. Accordingly, as a major part of this phase A study extension, a mission modeling and analysis task was conducted. A part of this task was to develop a fresh approach to mission modeling, one founded on economic principles rather than the survey methods that have been used in prior mission modeling activities. The objectives of this mission modeling activity are stated on the facing page.

Objectives of Mission Modeling

- Understand and characterize the fundamental determining forces that shape the future utilization of space systems.
- Develop a range of specific mission event predictions encompassing the credible range of determining forces.
- Provide a quantitative basis for evaluating the utility of manned space platforms and their relationships to space operations, research, and applications.
- Create an overall future scenario within which the benefits of manned space platforms can be quantified and compared with costs.

MISSION MODELING PROBLEMS

Past attempts at mission modeling have relied largely on survey methods. These have been historically unsuccessful. The reasons for lack of success are different in the different sectors of the space economy. (These sectors are discussed on subsequent pages.) In the NASA Research and Application sector, past mission models have been generally based on lists of payloads for which some scientific or applications rationale exists, but lists that do not consider representative budget realities that will constrain the number of payloads developed and flown.

If a permanently manned station exists in low earth orbit, this station can be used as a research facility for science and applications projects. Since no such facility presently exists, there is no well-organized user constituency to survey. The life sciences community is planning primarily Spacelab applications. There is some literature for utilization of a permanently manned facility, and these were used in this study as a source. Materials processing science is presently considering mainly shuttle sortie flights and free fliers. The substantial opportunities that would exist with a manned platform have not been well represented in the available literature.

In the commercial sectors, the planning horizon is relatively short, commensurate with the emphasis on near-term profitability and cash flow that always exists in a commercial organization. Further, such long term plans as may exist are generally treated as business secrets and are not revealed to anyone who surveys these organizations.

The defense sector exhibits some of the wish list syndrome but far less than the NASA sector, inasmuch as the planning process in DOD is more inclined to take into account budget realities. The defense sector also tends towards a planning horizon of about 10 years. Dealing with the defense sector in an unclassified study is confounded by classification of specific projects and the sensitivity of revealing potential evolutions of policy through forecasting of specific missions.

Mission Modeling Problems

- Past attempts at mission modeling have relied largely on survey methods. These have proven unsuccessful:
  - NASA Research & Applications Sector - Wish Lists are proffered, with no consideration of budget realities.
  - Space-based Research Facility - There is no well-organized constituency to survey.
  - Commercial Sectors - Planning horizon too short, typically five years. Business entrepreneurs don't reveal secrets.
  - Defense exhibits some of the "wish list" syndrome tends toward close-in planning horizon. Problems compounded by classification of specific projects and sensitivity of evolving policy.

DISTINCT SECTORS OF SPACE UTILIZATION ECONOMY
SHEET 1 OF 2

The first sector considered in our analysis was the NASA Research and Applications spacecraft sector. This sector represents institutionalized research and applications areas, including astrophysics and solar terrestrial physics, planetary exploration, etc. This sector is characterized by budget levels that have become generally institutionalized. These levels are subject to variation depending on political trends and problems with Federal deficits. Presently, this sector is under considerable budget pressure, but a long-range forecast must presume that current budget pressure will not necessarily permanently reduce the institutionalized levels of research.

The second sector is represented by that category of research that would be carried out on a permanently occupied manned platform, should one become available. A review of many potential lines of research indicated that the ones most likely to be implemented on a manned platform would be life sciences and materials processing, with some additional activity in space technology testing. There is no well-organized constituency for this kind of research on a manned platform since no research facility has been available. The constituency that existed in the early 1970s has generally dissolved.

This sector is characterized by latent demand. Budget levels for such research are not institutionalized and present levels of funding for life sciences and materials processing within NASA are quite small. It is plausible to anticipate some increase in budget levels in these areas with the availability of a manned platform, but because of continuing pressure on the Federal budget it is not expected that these areas would become funded to the same degree as existing research areas presently carrying out major flight projects. Private sector funding is available for materials research. The amount is not known, but is potentially large given the general economic character of the sectors of the economy that could benefit from breakthroughs in materials processing in the micro gravity environment.

SPACE OPERATIONS CENTER

NASA SOC-1436

Distinct Sectors of Space Utilization Economy
(Sheet 1 of 2)

BOEING

- NASA Research and Applications Spacecraft
  - Institutionalized Research & Applications Areas: Astrophysics and solar-terrestrial physics; planetary exploration; global environment & meteorology; earth resources; technology
  - Characterized by institutionalized budget levels subject to political vagaries.
- Space Platform Research Facility
  - Several lines of research exist, notably life sciences and materials processing. Some research planned for Spacelab. No well-organized constituency because no research facility has been available.
  - Characterized by latent demand. Budget levels not institutionalized and therefore limited. Private-sector funding available for materials research; amount unknown.

DISTINCT SECTORS OF SPACE UTILIZATION ECONOMY
SHEET 2 OF 2

The commercial sector for space utilization exploits those operations using space that are profitable. Presently, this amounts to space communications, using communications satellites. A future potential exists for materials processing commercial production if suitable process candidates are developed. Commercial sectors are characterized by exponential growth. In the case of space communications, this growth has historically been quite rapid.

The final sector is the defense sector. This sector is driven by estimates of the military threat, and to some degree by perceived military opportunities. Historically, this sector has exhibited a continued gradual increase in budget. Projection of present trends would suggest a budget doubling by about the year 2000.

SPACE OPERATIONS CENTER

NASA

SOC-1437

Distinct Sectors of Space Utilization Economy
(Sheet 2 of 2)

BOEING

- Commercial Sectors
  - Profitable operations using space: Presently communications with future potential of materials processing commercial productions.
  - Characterized by exponential growth, probably rapid.
- Defense Sector
  - Driven by estimated military threat and to lesser degree by perceived opportunities.
  - Historically continued gradual increase in budget. Projection of present trends suggests budget doubling by the year 2000.

MISSION MODEL PHILOSOPHY

In accordance with the characteristics of the sectors presented above, the philosophy for construction of the mission model is presented on the facing page.

SPACE OPERATIONS CENTER

NASA

SOC-1245

Mission Model Philosophy

BOEING

LOW MODEL – HIGHLY CONSERVATIVE PROJECTIONS

- NASA RESEARCH: CONTINUED GRADUAL DECLINE IN REAL BUDGET AUTHORITY
- COMMERCIAL: LESS GROWTH THAN PRESENT
- DOD: CESSATION OF HISTORICAL GROWTH TRENDS

MEDIAN MODEL – MOST LIKELY PROJECTIONS

- NASA RESEARCH: ROUGHLY CONSTANT REAL BUDGET AUTHORITY
- COMMERCIAL: CONTINUATION OF PRESENT TRENDS
- DOD: CONTINUATION OF PRESENT TRENDS

HIGH MODEL – OPTIMISTIC PROJECTIONS

- NASA RESEARCH: GRADUAL INCREASE IN REAL BUDGET AUTHORITY
- COMMERCIAL: MODEST INCREASE IN PRESENT GROWTH RATE
- DOD; INCREASE IN PRESENT GROWTH RATE

SATELLITE SERVICING ASSUMPTIONS

The present study has tended to be somewhat more conservative in satellite servicing than related studies. We have assumed that only high-value payloads will be serviced inasmuch as low-cost payloads are of a nature not requiring service, and at any rate may not have sufficient value to warrant a servicing mission.

GEO servicing missions are deferred in this model until they are warranted by the total assets value in geosynchronous orbit. We arrived at timing by taking an insurance approach: When the value of the GEO assets exceeds $10 billion, then the creation of a servicing capability is justified as insurance; if a high-value payload at GEO fails, the capability will exist to go there and restore it to service. This judgment was based on the premise that the basic upper stage technology for a GEO servicing mission would exist in the form of orbit transfer vehicles for payload placement and that the added investment to create a manned orbit transfer vehicle capability for satellite servicing would be on the order of a billion dollars.

Servicing rates were estimated on the premise that a typical spacecraft has a 3% chance of failure in each year of service. This corresponds to a 20-year mean-time-between-failure for spacecraft. This is somewhat better than present experience, but trends in spacecraft life indicate that in the timeframe of interest a 20-year mean-time-between-failure is realistic. Finally, we assumed that the typical GEO servicing mission will service two to four spacecraft. Some failures at GEO will be so serious as to need immediate servicing. However, many will be of a nature that the spacecraft owner will elect to wait until he can cost-share with another owner needing service before he services his system.

Satellite Servicing Assumptions

- Only high-value payloads serviced
- Geo servicing deferred until warranted by total assets value
  - "Insurance" approach: When value of Geo assets exceeds $10 billion, creation of service capability is justified as insurance.
  - Typical spacecraft has 3% change of failure needing service each year (20-year MTBF).
  - Typical Geo servicing mission services 2-4 platforms

NASA SECTOR

The following discussion describes the development of the traffic model, sector by sector.

NASA Sector

BUDGET RATIONALIZATION APPROACH

The NASA Research and Applications sector mission model was rationalized beginning with the available models created by a survey approach. These available models were assumed to represent scientifically-justifiable missions. The principal premises and method of analysis are described on the facing page.

The basic premise was that each subsector of the NASA Research and Applications sector would have to live within historical budget levels. A high-level cost model was employed to derive budgetary estimates based on the cost of spacecraft development, production, reuse, and servicing. This high-level cost model was also derived from historical experience. It is presumed that the cost of spacecraft development and production will dominate the cost such that the simplification of ignoring launch services will not lead to major errors in the model. The iteration procedure presented in the figure was used to arrive at final models. The funding spread routine simply takes the costs estimated for spacecraft and spreads them over a reasonable development period for the development of the spacecraft, to present a funding projection for the subsectors.

SPACE OPERATIONS CENTER

NASA

SOC-1450

Budget Rationalization Approach

BOEING

- Mission projections based on living within historical budget trends
- High-Level Cost Model
  - Spacecraft Development $80,000/KG
  - Spacecraft Production $20,000/KG
  - Spacecraft Reuse after Recovery $10,000/KG
  - Spacecraft Revisit $5,000/KG

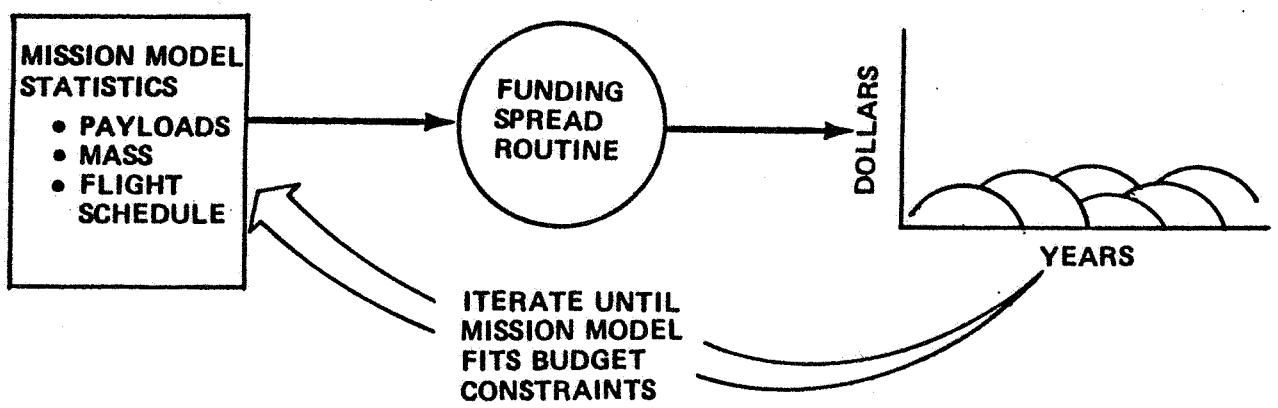

ASTROPHYSICS FUNDING LEVELS
(NEAR TERM PROGRAMS AS PRESENTED IN NASA PLANNING DOCUMENTS)

The funding, spreading and plotting program utilized for this analysis accepts a maximum of 25 cost elements for each chart presented. The number of cost elements for the astrophysics program as presented in NASA planning documents was approximately 40. Consequently this program was divided into near-term and far-term programs. The facing page presents the estimated funding requirements for the near-term programs as presented in NASA planning documents. These programs were characterized by multiple simultaneous development of observatory class payloads, and generally resulted in budget level estimates that exceed the present budget level by factors approaching 10.

SPACE OPERATIONS CENTER

NASA

SOC-1514

Astrophysics Funding Levels
(Near-Term Programs as Presented in NASA Planning Documents)

BOEING

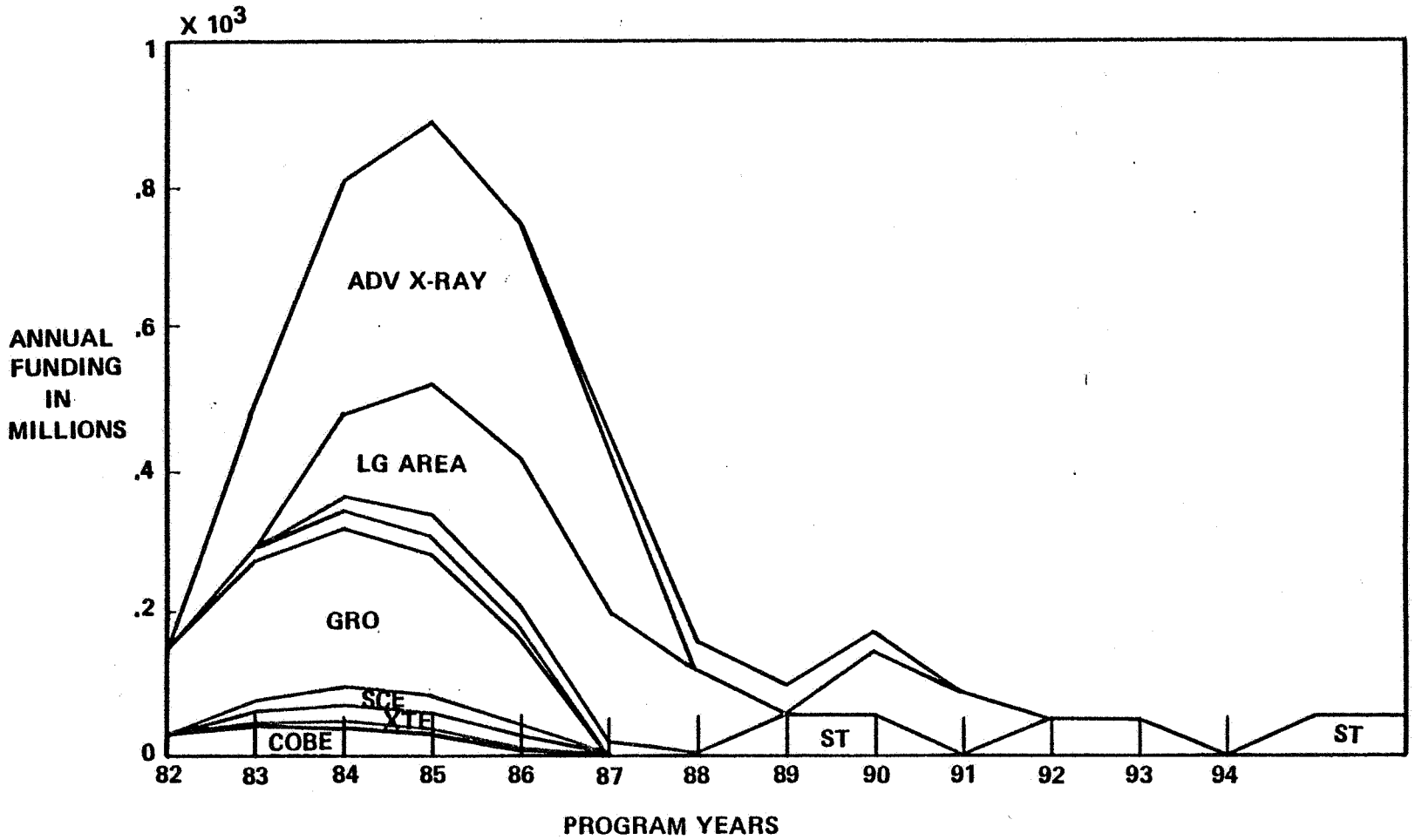

ASTROPHYSICS FUNDING
(LONG RANGE PROGRAMS AS PRESENTED IN NASA PLANNING DOCUMENTS)

The funding estimates for the long range programs reached even higher total values than the near term program with a funding peak in the mid 1990s of roughly $1½ billion. These models must be regarded as unrealistic inasmuch as the present level of funding for the astrophysics programs is on the order of $200 million. Consequently, the rationalization approach was used to eliminate or defer cost events until a program funding projection similar to historical budget trends was accomplished.

SPACE OPERATIONS CENTER

NASA

SOC-1513

Astrophysics Funding
(Long Range Programs, as Presented in NASA Planning Documents)

BOEING

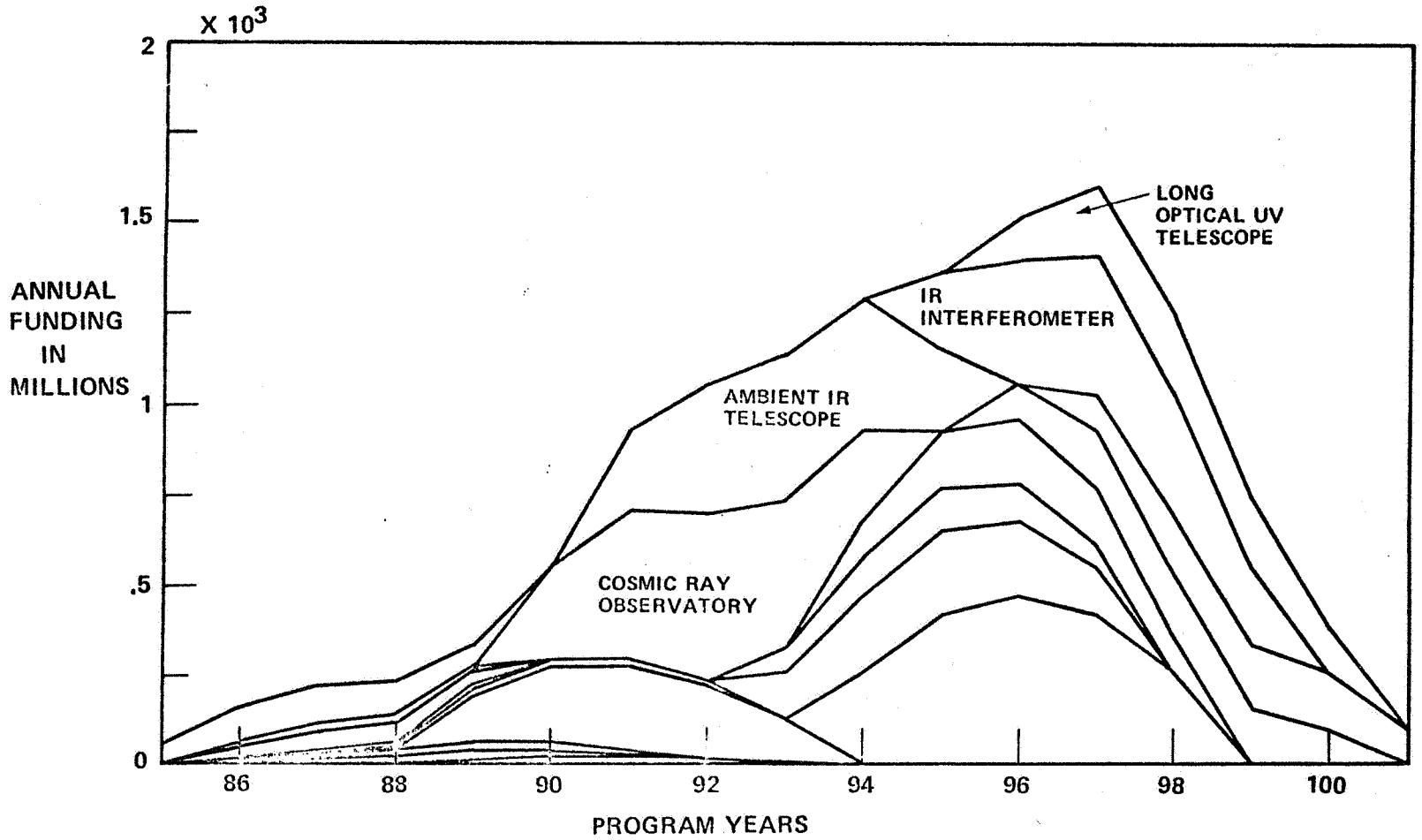

RATIONALIZED MODEL FOR ASTROPHYSICS FUNDING

The astrophysics model, after being rationalized, exhibits the funding trend illustrated on the facing page. This funding trend, although perhaps slightly ambitious, was used as the median traffic model. The low traffic model had fewer payloads and the high traffic model slightly more. In general for the NASA sector, the differences between the low and high models were not great inasmuch as the institutionalized nature of these sectors would suggest that large fluctuations in historical funding trends should not be expected.

SPACE OPERATIONS CENTER

NASA

SOC-1540

Rationalized Astrophysics Model
(Based on Medium Traffic Model)

BOEING

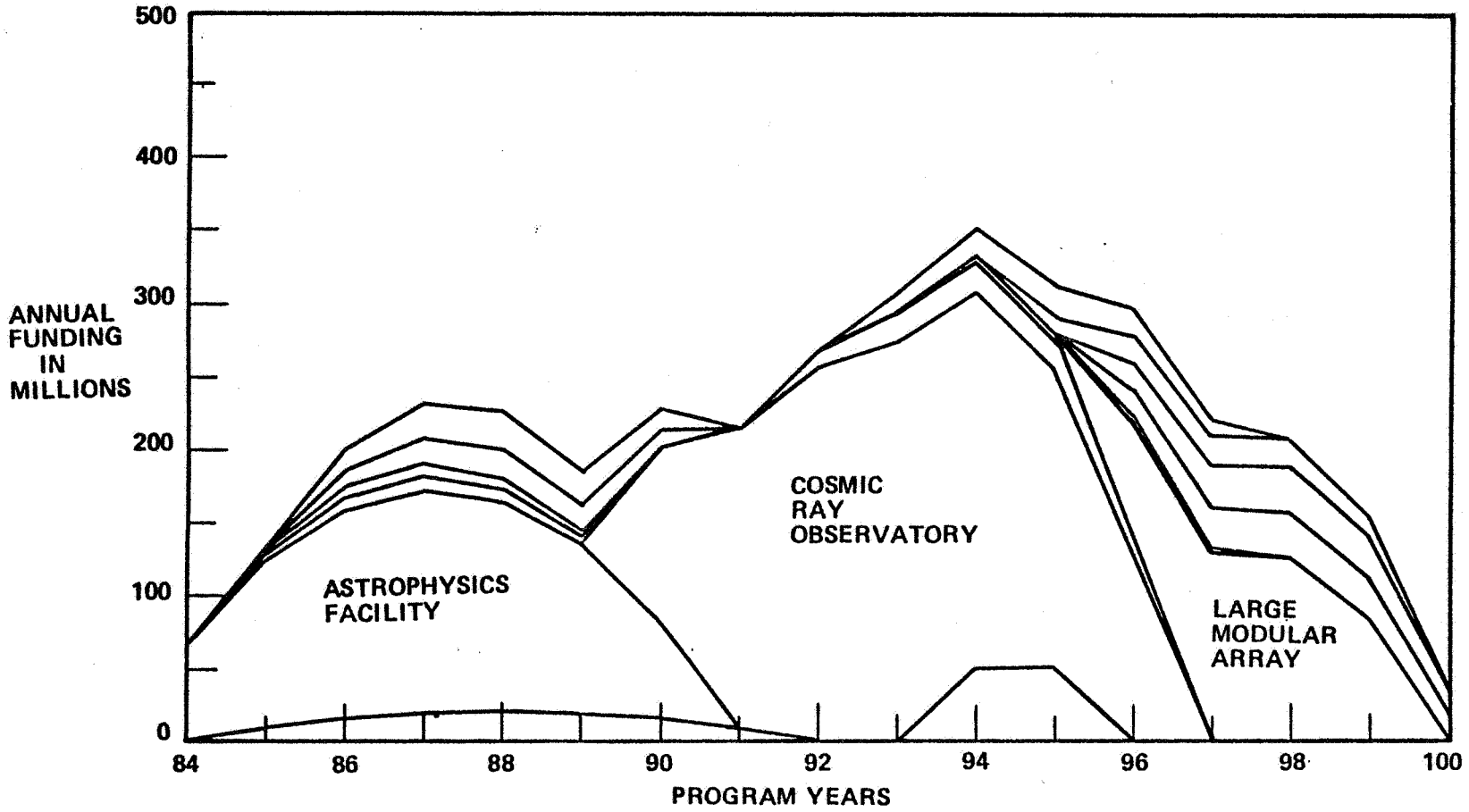

GRUMMAN SOC MISSION MODELING

Grumman's mission needs and modeling analysis task on SOC are keyed to the satellite/service user model (S/SUM) developed for their recent study of satellite services near the orbiter. The S/SUM contains 210 satellites and payloads, which were derived from the NASA 5-Year Plan (1981 - 85), STS flight assignment, OAST space systems technology model and other unclassified data sources. This model spans the years 1981 to 2000 and includes LEO service events for launch, on-orbit servicing revisits, and retrieval for earth return. In addition to orbiter direct delivery satellites, it covers LEO self-propelled satellites, GEO satellites, upper stages, planetary spacecraft, sortie payloads and DOD missions.

As shown on the facing page, Grumman's SOC mission modeling effort was focused on space science, earth sensing and space testing missions. Information on current NASA programs was used to update the S/SUM data base for these mission areas in the 1985 to 2000 year period. This mission forecast was then analyzed with respect to related budget projections and estimated satellite program costs. As a result of this analysis three mission models (high, medium and low) are defined for each area of interest.

GRUMMAN SOC MISSION MODELING

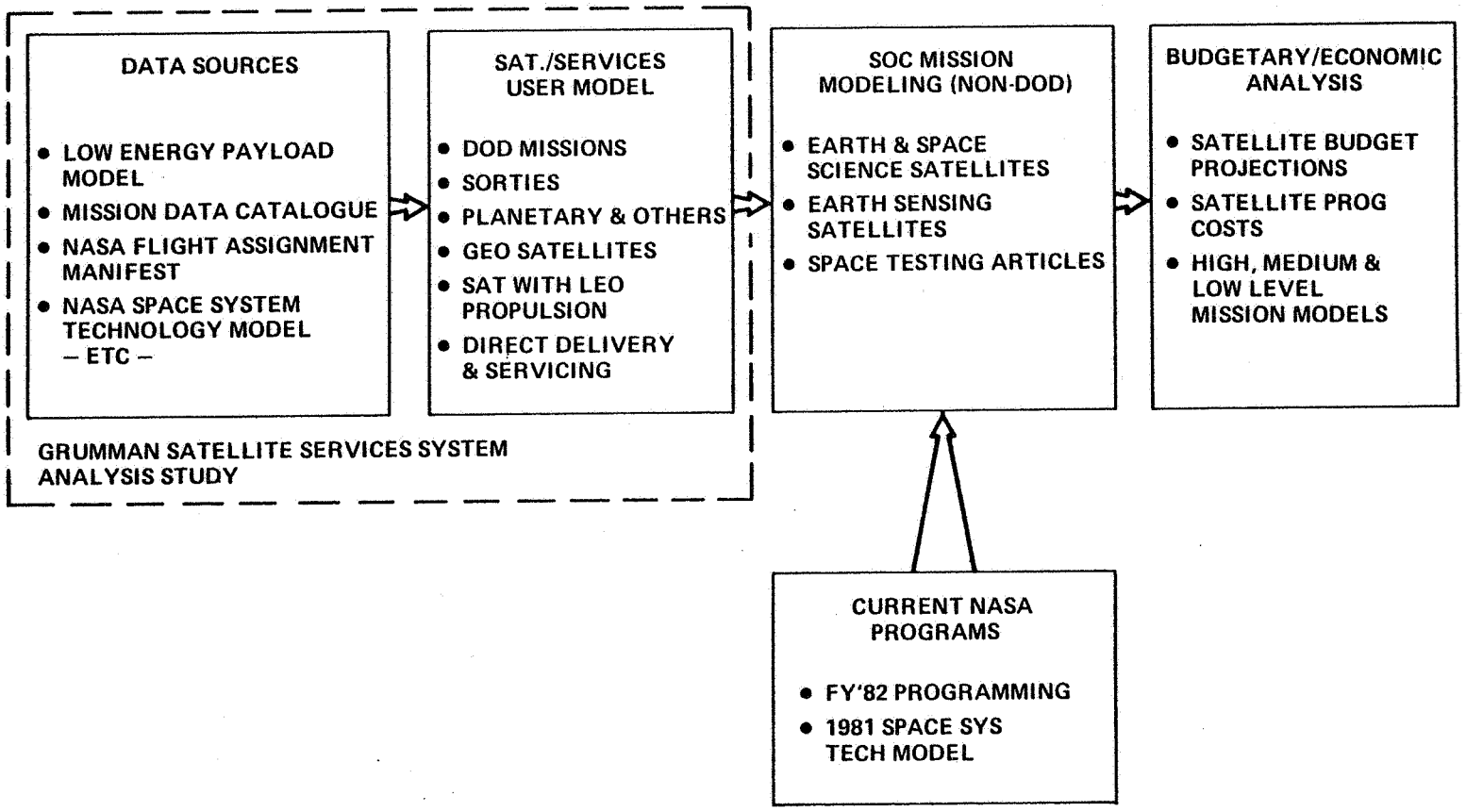

GRUMMAN

TOTAL SATELLITE MODEL FROM S/SUM DATA BASE

The adjacent histogram provides the projected launch rate per year from 1981 through 2000 for the updated SAT/SUM data base of 11/2/81, including both military launches of shuttle and the non-DOD payloads. During the past 1987 time period, this data base nominally covers 5 unclassified DOD launches per year; whereas, the non-DOD satellite launches per year range from 50 to 60 in the early '90s and then approach 80 in the late '90s. Since the data base covers a broad range of satellite orbital inclinations (i.e., 0° to 100°), all of these satellites are not compatible with SOC. The non-DOD launches are divided into the overall mission areas being addressed by Boeing and Grumman. Grumman's assigned mission areas on earth sensing, earth and space sciences, and space testing is depicted at the bottom of the chart. Boeing addressed the other mission areas, independently.

TOTAL SATELLITE MODEL FROM S/SUM DATA BASE

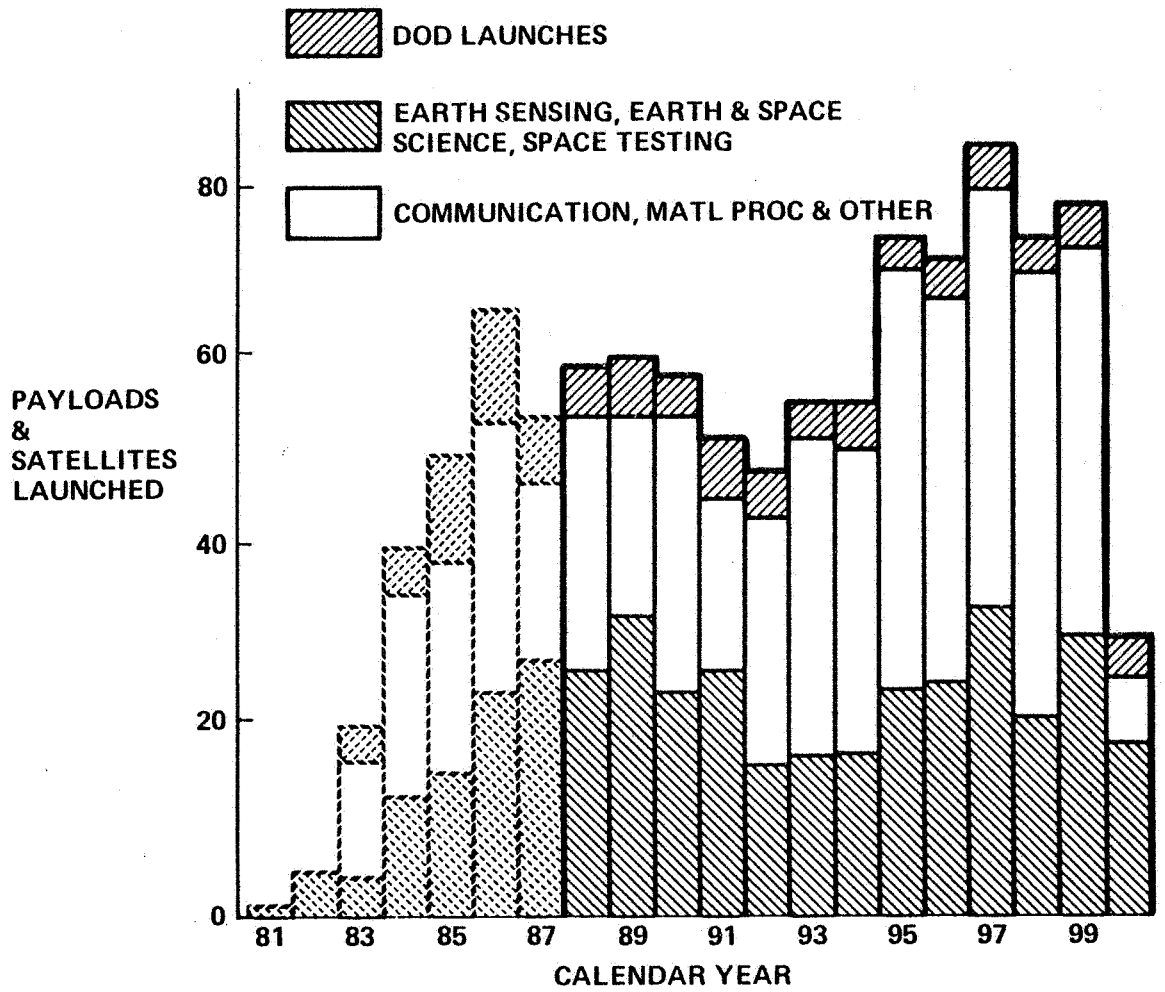

GRUMMAN

R81-2100-085W

SATELLITE/SERVICE USER MODEL FOR SOC

The satellite/service user model for SOC (S/SUM/SOC) is provided in the final report for the major categories within each mission area. Programs on astrophysics, solar terrestrial physics and planetary catellites encompass all earth and space science missions. Earth sensing missions, in turn, are covered by global environment and resource observation satellite programs. Satellite characteristics, their orbits and mission traffic schedule are provided for all the programs in each category as illustrated in the adjacent chart. The satellite missions are listed chronologically within each category. These missions are identified in accordance with the nomenclature defined in the 1980 NASA Space Systems Technology Model (i.e., A-3, S-2, etc.). The correlation between these designators and the revised listing in the 1981 NASA Space Systems Technology Model is shown parenthetically under the name of the satellite. Satellite service mission events for deployment (D), on orbit support service(s), and satellite return retrieval (R), are scheduled on different lines. The Space Telescope, for example, is planned to be launched in 1984. This satellite will be serviced on-orbit at least once (1986) during its 5 year mission. Potential service events for contingency situations are also included. The Space Telescope is retrieved in 1989 for ground refurbishment and then relaunched in 1990 for another 5 year mission. This retrieval and relaunch cycle is repeated again in 1995 and 1996. Similar data are provided for other satellite missions included within the 1985 through 2000 time frame.

SATELLITE/SERVICE USER MODEL FOR SOC

- SPACE TESTING
- RESOURCE OBSERVATION
- GLOBAL ENVIRONMENT
- PLANETARY
- SOLAR TERRESTRIAL
- ASTROPHYSICS

1 NUMERALS DENOTED SCHEDULED EVENTS – DOTS DENOTE POTENTIAL SERVICE EVENTS – UNSCHEDULED

2 DIRECT ORBITER LAUNCH AND RECOVERY

* D – DELIVER
S – SERVICE
R – RETRIEVE

ID NO.	NAME	MISSION FUNCTION*	ORBIT H	ORBIT I	MASS KG UP	MASS KG DN	LENGTH M	DIA M	TRAFFIC 1 5	6	7	8	9	0	1	2	3	4	5	6	7	8	9	0
A3	SPACE TELESCOPE (S3)	D S R	593 KM	28.5	11000 11000 –	– 11000 11000	13.6	4.3	●	1	●	●	1	1	●	1	●	●	1	1	●	1	●	●
A7	GAMMA RAY OBSERVATORY (S9)	D S R	400	28.5	11000 11000 –	– 11000 11000	6.0	4.5	1	●	1													
A4	COSMIC BKGND EXPL. 2 (S7)	D S	900	99	1421 –	– 1421	4.8	4.4	1		1													
A5	EXTREME UV EXPLORER (S10)	D S	550	28.5	400 –	– 400	4.5	2.0		1	1													
A10	X-RAY TIME EXPLORER (S11)	D S R	400	28.5	1000 1000 –	– 1000 1000	4.0	2.0		1	●	1	1	●	1									
A61	SOLAR CORONA EXPLORER	D S R	600	33	1000 1000 –	– 1000 1000	3.5	3.0		1		●		1										

GRUMMAN

ECONOMIC ANALYSIS GROUND RULES AND ASSUMPTIONS

In responding to Task 8.3 - Perform Budgetary and Economic Analysis - both the appropriate NASA budget histories and cost of projected satellite programs were assessed as indicated in the adjacent chart. In the budget projection process, it was recognized that both national policy and national economic growth could influence the funding available to the various space mission catagories. In the cost assessment, it was necessary to define simple cost estimating relationships to apply to the satellite within each mission area. Finally, it was necessary to test cumulative costs against budget funds available to define compatible programs schedules.

This process, covering the 1983 through 2000 times frame for six NASA mission areas (planetary, astrophysics, solar terrestrial, global environment, resource observations and space testing). In projecting alternative budgets, baseline budgets were established based upon data from recent NASA 5-year plans and FY'82 budget estimates using satellite program costs only, excluding research and analysis, sub-orbital testing spacelab and other non-satellite programs.

Estimates of the cost per unit mass of a spectrum of types of satellites were developed using data derived from informal contacts with NASA centers and from in-house cost evaluation file data. Three rather distinct catagories or types of satellites tended to emerge suggesting thee cost factors rather than a single one. Cumulative program costs for each mission area could then be developed assuming the S/SUM launch sequence with satellite costs assigned at launch date. By referencing the cumulative cost history from S/SUM against the three alternative budgets for each mission area corresponding alternative budget-limited launch schedules were developed. Re-flights within a given satellite program and non-NASA satellite missions were then inserted on the budget limited schedules based upon the S/SUM intervals between follow-on missions, and upon S/SUM schedules for non-NASA programs.

ECONOMIC ANALYSIS GROUND RULES & ASSUMPTIONS

APPROACH
- DEVELOP HIGH, MEDIUM AND LOW BUDGETS
- COST S/SUM/SOC SATELLITE LAUNCH PLAN
- MATCH LAUNCH SCHEDULES TO CUM BUDGETS AVAIL.

COVERAGE
- MAJOR NASA OFFICES (OSTA, OSS, ETC) ONLY
- TIME FRAME – 1983 THRU 2000

BUDGET PROJECTION
- BASELINE SAT PROG BUDGETS - 5 YR PLANS & BUDGET EST
- SAT. PROG ONLY; EXCLUDES R & A, SUB ORB, SPACELAB & OTHER

SATELLITE PROGRAM COST ASSESSMENT
- PROG COSTS & MASS FROM NASA & GAC DATA
- COST PER UNIT MASS - THREE SAT. CLASSES

CUM PROG COSTS & BUDGET LIMITED LAUNCH SCHED
- S/SUM LAUNCH SEQUENCE
- SAT. COSTS ASSIGNED AT LAUNCH DATE
- LAUNCH DATE KEYED TO AVAIL BUDGETS
- RE-FLIGHTS & NON-NASA SCHEDULED PER S/SUM

GRUMMAN

BUDGET TRENDING ALTERNATIVES

From the baseline budget data available on the six mission areas, covering a maximum of six years, it was necessary to project future alternative budgets covering a span of the next eighteen years. The opposite figure illustrates three conceptual approaches to projection.

The first, Continued Trend, illustrates projecting the present trend of growth along with a high and low budget based on a growth or shrink of this annual budget trend by an arbitrary percent each year. A second approach, Current Base, using FY'82 as an annual base budget level and projecting zero, and positive and negative annual percentage growth rates of 2.5% is illustrated second. This 2.5% real annual growth and its mirror shrink rate are keyed to Data Resources, Inc. Autumn 1981 U.S. Long-Term Review assessment of 2.5% real GNP growth rate through 2006. The third conceptual chart illustrates a choice of a constant (baseline) annual budget and then a constant delta above and below that level for the high and low projection.

The Continued Trend approach with varying growth rates above and below the trend offers the potential advantages of capturing the trend of budgeting for each mission area, and looks at growth potentials relative to trends in real Gross National Product. This approach has the weaknesses of a short trend base causing unrealistic swings of the annual budget on an eighteen year projection. Study of NASA budgets over the last fifteen years also indicates that the annual budgets fluctuate significantly, representing policy changes in contrast with national economic growth trends.

The Current Base approach establishes a recent budget as a base and looks at long term growth on an annual average basis comparable to real GNP changes. Although two weaknesses of this approach, potential bias in the chosen base and the policy nature of NASA funding are recognized, the Current Base approach offered near term policy guidance and use of reasonable real GNP trends. Projections of future high, medium and low budgets for five of the six NASA mission areas were carried out using this approach.

The alternate trends approach primarily reflects government policy alternatives and was used for the space testing mission area, with plus and minus 33% shifts around the small constant baseline budget.

BUDGET TRENDING ALTERNATIVES

ALTERNATE APPROACHES

ANNUAL BUDGETS

NASA BUDGETS POLICY SENSITIVE

CONTINUED TREND

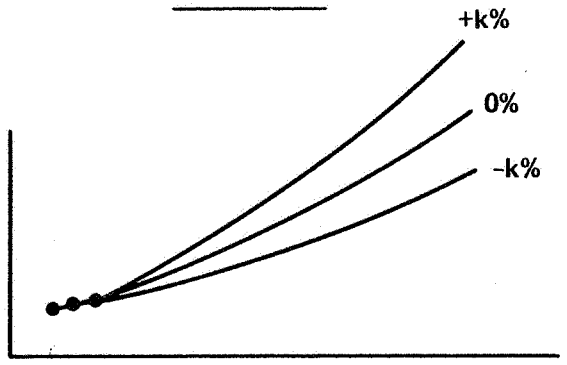

ASSESSMENTS

KEY DRAWBACKS – SHORT DATA BASE UNREALISTIC TRENDS

CURRENT BASE

ANNUAL BUDGET

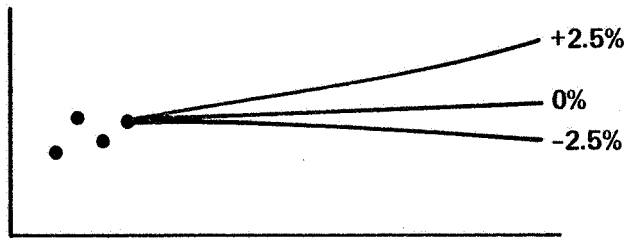

ADVANTAGE – CURRENT BASE & ALT GNP (REAL) TRENDS (ALL MISSIONS EXCEPT SPACE TESTING)

ALTERNATE LEVELS

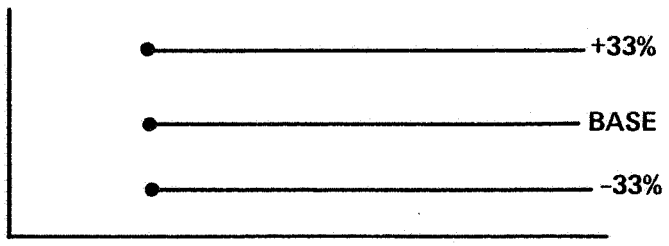

ADVANTAGE – REFLECTS POLICY ALTERNATIVES (SELECTED FOR SPACE TESTING PROGRAM)

YEAR

GRUMMAN

R81-2100-172B

RECENT BUDGETS FOR NASA SATELLITE PROGRAMS

The opposite page table presents recent satellite program budget histories for five traditional NASA mission areas. Data are provided in 1981 dollars with the dollar base of the data sources and the required adjustment factor for conversion to '81 dollars presented in the upper portion of the chart. Data covering satellite total program costs, without research and analysis were obtained from NASA 5-Year Plans and the FY'82 Budget Request.

The astrophysics and solar terrestrial mission budgets are combined in the last three fixcal years. These combined budgets were therefore used as the budget history, which represents a generally rising trend of about 6% per year from FY'78 through FY'82. Planetary, global environment and resource observation presented less obvious trends.

Because of the sensitivity of NASA budgets to policy changes and the shortness of the budget for trending the FY82 column of data was therefore chosen as the baseline for these NASA mission areas.

RECENT BUDGETS FOR NASA SATELLITE PROGRAMS

YEAR	FY-'77	FY-'78	FY-'79	FY-'80	FY-'81	FY-'82
$ YR/BASE ADJUST FACTOR	'78/'81 0.77	'79/'81 0.84	'80/'81 0.92	'80/'81 0.92	'81/'81 1.00	'82/'81 1.09
PROGRAM ELEMENTS	ANNUAL BUDGET, $M 1981					
ASTROPHYSICS	68	147	157	256	250	295
SOLAR TERRESTR	65	79	71			
PLANETARY	147	151	145	190	125	183
GLOBAL ENVIRON	–	–	30	55	60	122
RESOURCE OBS.	–	–	130	131	115	119

DATA BASE:
- NASA 5YR PLANS FY'78, '79 & '80 & FY'82 NASA BUDGET REQUEST
- SATELLITE PROGRAMS ONLY, EXCLUDES SUPPORT R&A

GRUMMAN

R81-2100-100W

ALTERNATE BUDGETS FOR PLANETARY SATELLITE PROGRAMS

Three alternate budget projections in 1981 dollars for the planetary satellite program through the year 2000 are shown in the adjacent chart as projections from the budget history data from the previous chart. Annual Budget alternatives are seen as constant at $185M - at $185M at the start of 1983 growing at 2.5% per year and this $185M baseline shrinking at 2.5% per year. Thus the high annual budget has grown to nearly $290M by the end of the year 2000, while the low annual budget is seen to drop from $185M in 1983 to under $120M at the end of the year 2000.

This chart also provides these three budgets in cumulative form in the curves which slope upward to the right from the start of 1983. The baseline constant budget projection cumulates to over $3.25B over this 18 year period. The High Budget projection cumulates to nearly $4.4B while the Low Budget accrues a total of about $2.6B. Although the differences between the high and low budgets is small during the 1980s the cumulative effects are significant by the mid '90s.

ALTERNATE BUDGETS FOR PLANETARY SATELLITE PROGRAM

CONSTANT 1981 DOLLARS

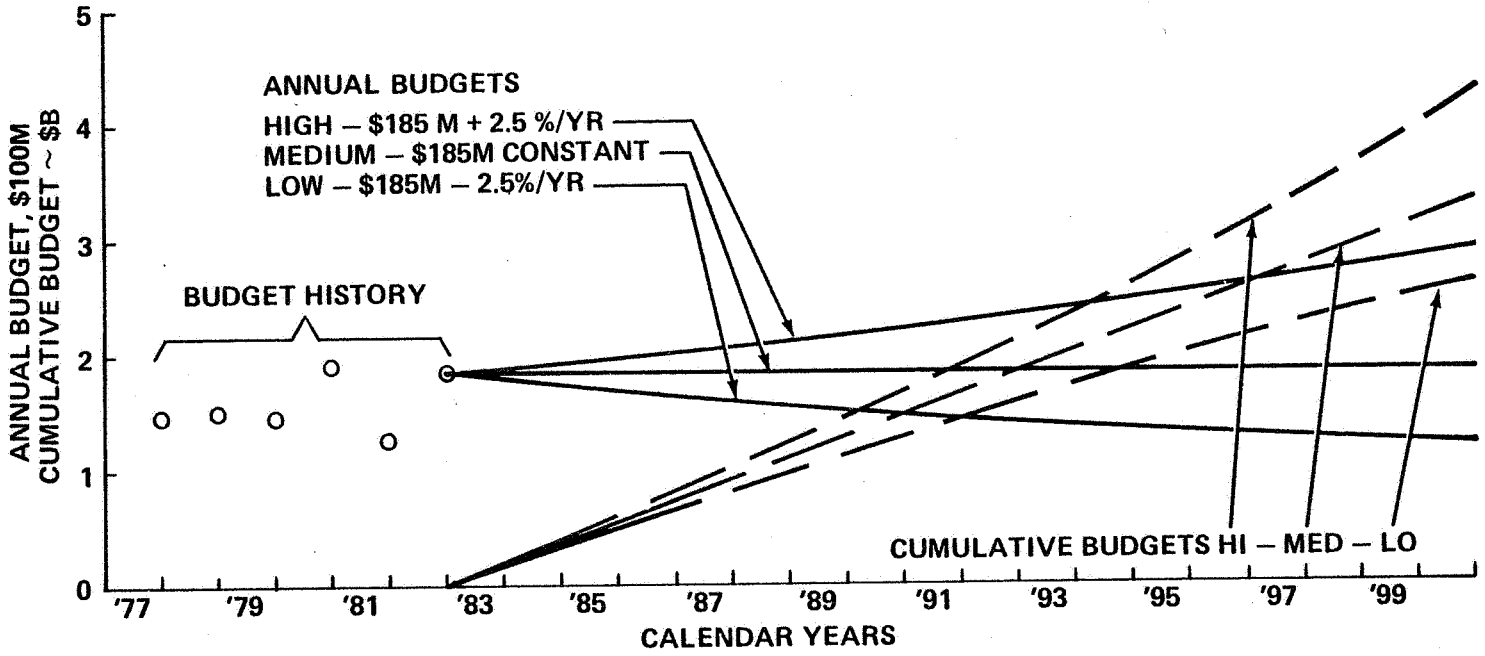

GRUMMAN

R81-2100-102W

ALTERNATE BUDGETS FOR COMBINED SOLAR TERRESTRIAL AND ASTROPHYSICS SATELLITE PROGRAMS

Annual and cumulative alternate budgets are presented for these combined mission areas. It is seen that the combined budget history showed an annual increase of approximately 6% per year, resulting in nearly a threefold annual growth by the end of this century.

Basic zero growth and plus and minus 2.5 percent per year projections from the 1983 baseline of $295M are shown as the assumed projections. The cumulative high budget makes nearly $7B available for these combined satellite programs compared to just over $4B for the cumulative low budget over the 18 year projection.

ALTERNATIVE BUDGETS FOR COMBINED SOLAR TERRESTRIAL AND ASTROPHYSICS SATELLITE PROGRAM

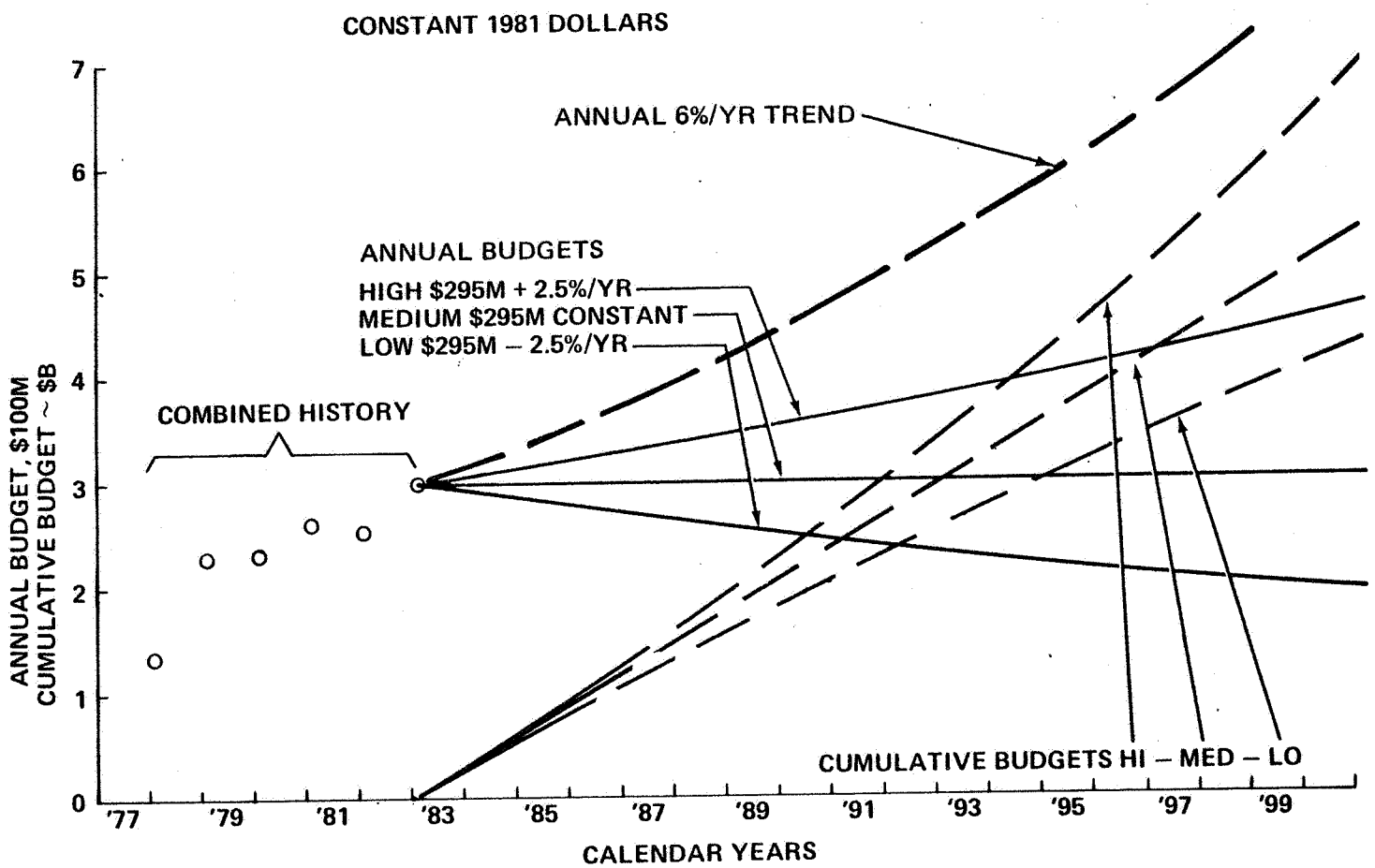

GRUMMAN

ALTERNATE BUDGETS FOR RESOURCE OBSERVATION SATELLITE PROGRAM

Budget history, and annual and cumulative projections at three levels are presented for the resource observation mission in constant 1981 dollars.

The limited budget history data are relatively constant and close to the $120M baseline from the FY'82 budget estimate. Annual growth rates of zero and plus and minus 2.5 percent per year were again assumed. The resulting cumulative budgets over the 18 year period show a spread of nearly $1.25B between the high and low projections.

ALTERNATIVE BUDGETS FOR RESOURCE OBSERVATION SATELLITE PROGRAM

CONSTANT 1981 DOLLARS

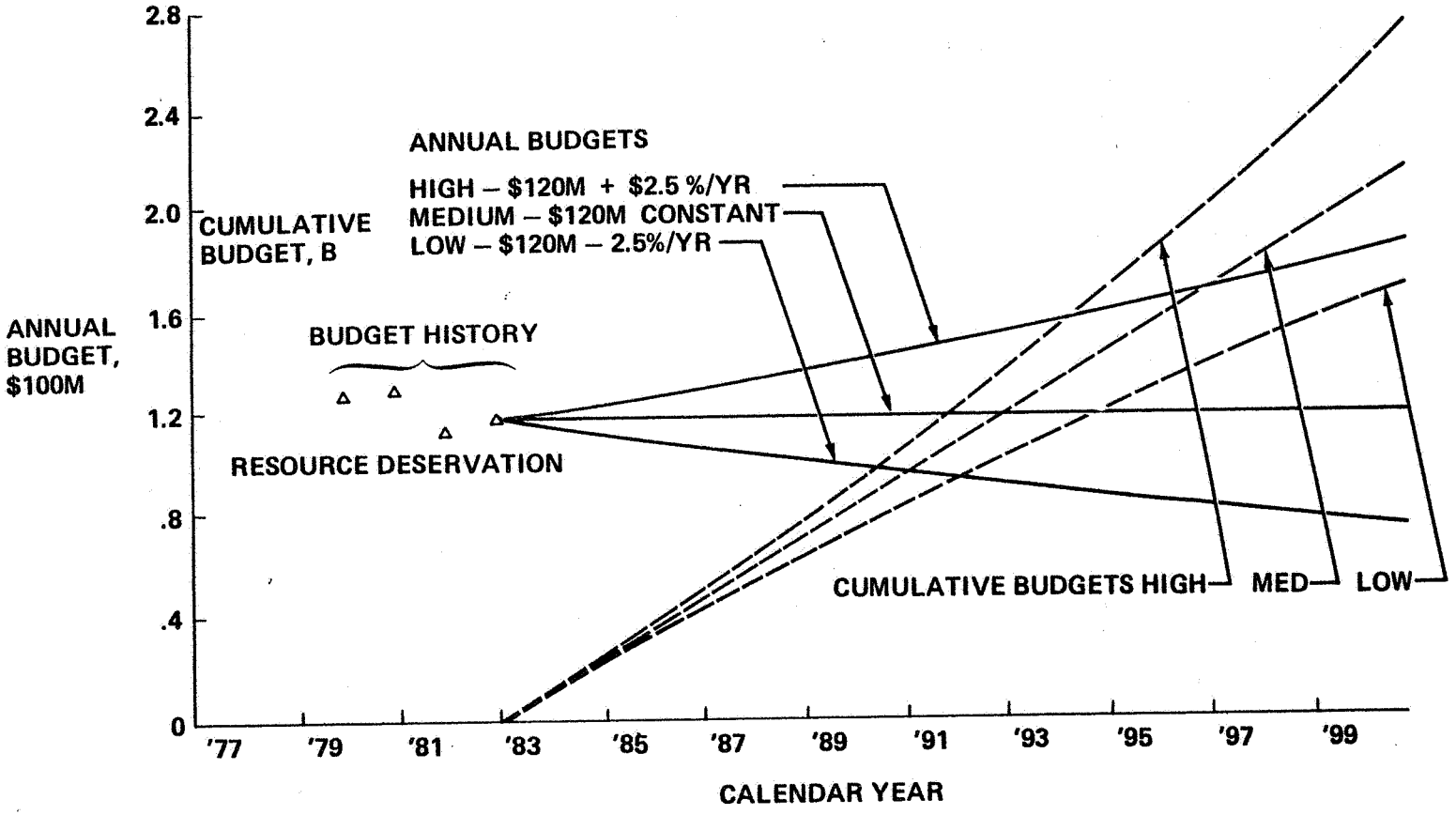

GRUMMAN

R81-2100-104W

ALTERNATIVE BUDGETS FOR GLOBAL ENVIRONMENT SATELLITE PROGRAM

The budget history along with annual and cumulative alternate projections are presented for NASA's global environment satellite program. Rapid increases in the annual budget history are thought to reflect policy changes in this mission area funding which can not be considered as a trend. Thus the FY 82 budget estimate of approximately $120M was chosen as the baseline, and zero and plus and minus 2.5% growth per year projections were assumed.

Thus the projected budgets for this global environment satellite program are identical to those used for the resource observation program.

ALTERNATIVE BUDGETS FOR GLOBAL ENVIRONMENT SATELLITE PROGRAM

CONSTANT 1981 DOLLARS

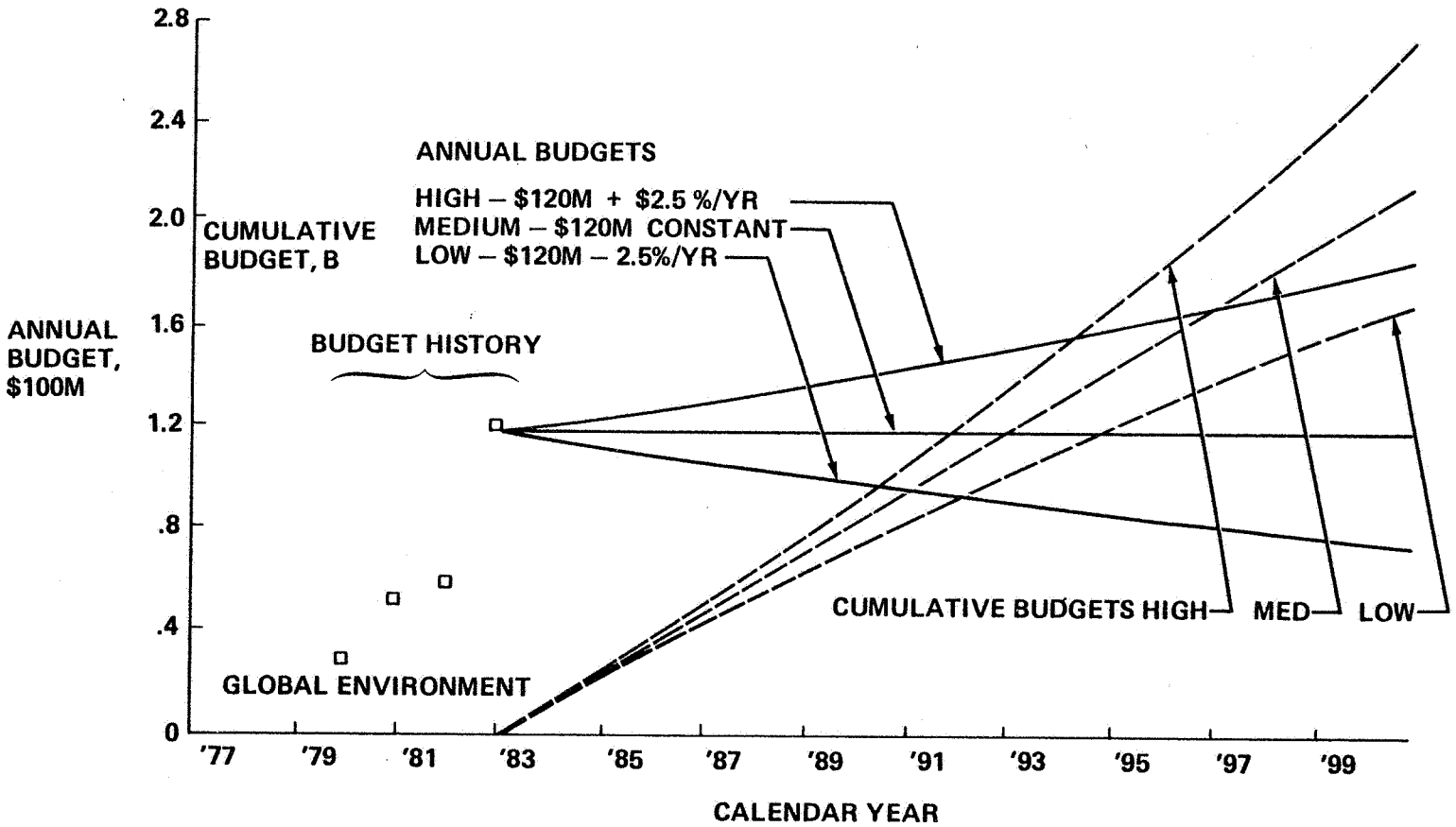

GRUMMAN

R81-2100-104W

ALTERNATIVE BUDGETS FOR SPACE TESTING PROGRAM

Budget histories for this mission area were derived out of advanced programs at OSTS and space systems technology at OAST. Assessments of the cost of space testing articles in the S/SUM/SOC model indicated an annual expenditure comparable to the apparent space testing budgets of OAST and OSTS at about $9 M/year. This constant value was selected as the medium budget projection. Because of the small overall budget level involved, it appeared appropriate to treat the high and low budgets as alternate policies parallel to the constant medium projection. A delta of 33% ($3 M) above and below the medium annual budget was chosen to reflect significant policy differences for the three budget projections.

Cumulative budgets corresponding to these three constant annual budget projections show a significant spread by the end of the study time period.

ALTERNATE BUDGETS FOR SPACE TESTING PROGRAM

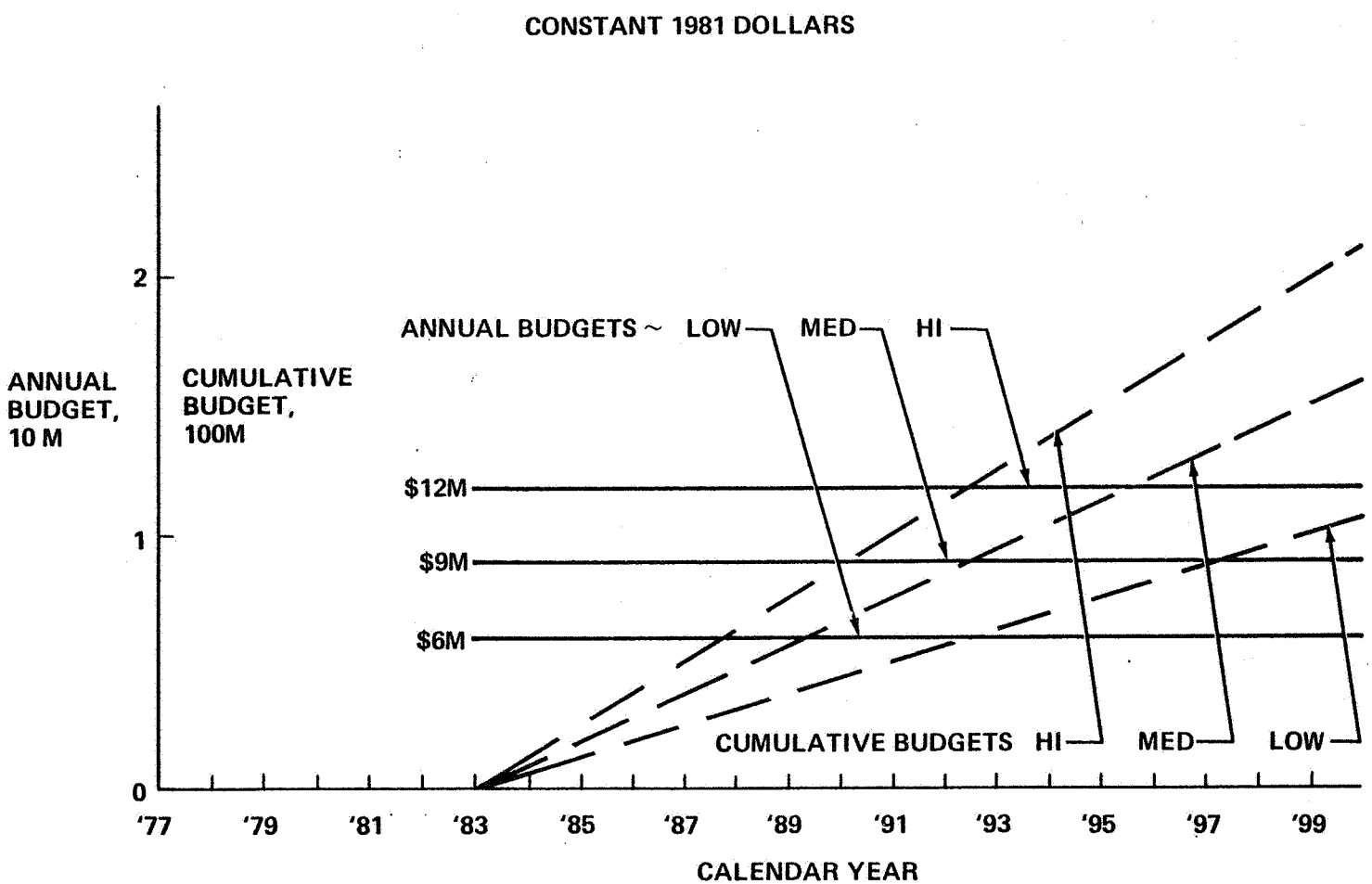

GRUMMAN

TYPICAL SATELLITE PROGRAM COSTS VS MASS

As discussed previously in reviewing ground rules and assumptions for this economic analysis, simple cost estimating relationships (CERs) were needed to develop estimates of total mission area costs. This plot of satellite total program cost versus total payload to operating orbit presents this simple CER development.

Program Costs in 1981 dollars and the on-orbit mass of a number of different classes of satellites were defined from informal NASA contacts and from Grumman internal studies. Data appeared to fall into three distinct bands of cost per unit mass..

< Planetary programs and high technology programs involving advanced state-of-the-art sensors and/or guidance and control formed one band at the upper left of the chart. A CER of $250,000 per kilogram as indicated by the heavy line labled planetary and landsat appeared to adequately represent this group.

A second band, shown through the center of the chart is based on several rather "conventional" high technology satellites not requiring major breakthroughs in technology. NOAA, HEAO and solar max define a slope of approximately $50,000 per kilogram shown for the Conventional LEO and GEO line.

A third type of satellite involving primarily structural elements was found to be again significantly less expensive per unit mass. A total of four of these type articles was used to define the $10,000 per kilogram CER line at the lower right of the chart.

TYPICAL SATELLITE PROGRAM COSTS VS MASS, 1981 $

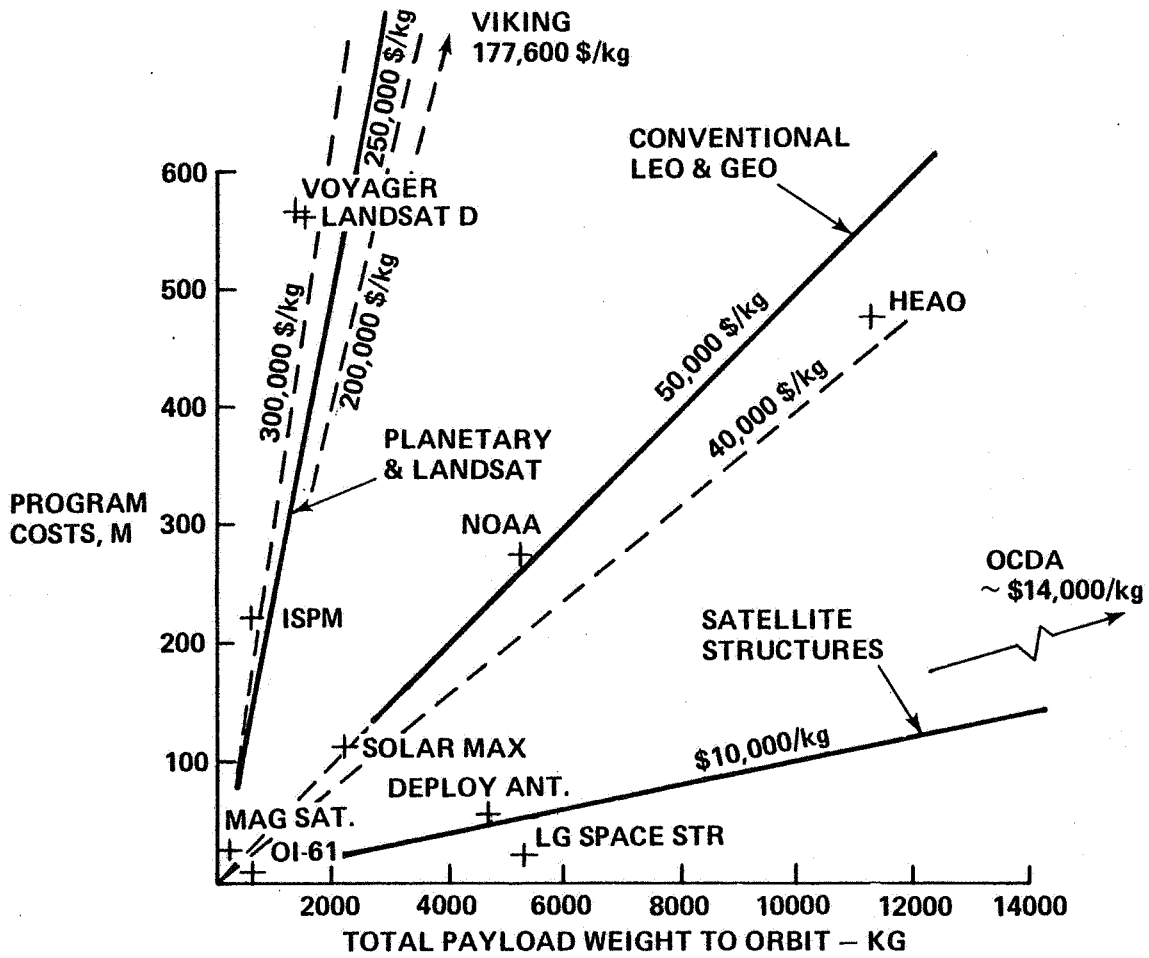

GRUMMAN

R81-2100-106W

ALTERNATIVE CUMULATIVE BUDGETS AND CUMULATIVE PROGRAM COSTS - PLANETARY SATELLITES

The relationship between cumulative budgets and cumulative planetary satellite program costs is shown in the opposite page chart. Cumulative costs were generated by summing costs based on the planetary CERs applied to the satellite weights on the schedule from the S/SUM/SOC planetary mission model.

The cumulative cost progression, with each satellite identification number called out indicate that out through 1991 the S/SUM/SOC schedule is generally close to the high cumulative budget (+2.5%/Yr) line. From 1993 on, the cumulative costs line rapidly diverges from the high budget line alternate. Cumulative budget lines of 5 and 10% per year are shown to illustrate general level of growth involved. The data point at the upper right labeled P-5 with an arrow denoting $14.2B indicates that even a 10% annual real growth accrues about two-thirds of the budget required to fund the complete S/SUM/SOC in the same time frame.

The chart in this form is also useful for defining satellite launch schedule for the three chosen projected budget levels of zero and plus and minus 2.5% annual growth. The horizontal, constant cost line drawn through the P-7 data point intercepts the high, medium and low cumulative budget curves. These points of intersection correspond to the schedule on which the budgets would be available to launch planetary satellite P-7, asteroid multiple rendezvous. Thus where S/SUM/SOC calls for a mid-'93 launch of P-7, the high budget allows Fall of 1994 launch, the medium budget in late '96 and the low projection not until the first half of 2000.

Dashed horizontal lines drawn through P-11, Near Earth Asteroid Sample) and the first and second launches of P-5 (mars sampler return) indicates the potential extension of the planetary satellite program through real annual budget growth rates of 5 and 10% per year.

ALTERNATE CUMULATIVE BUDGETS AND CUMULATIVE PROGRAM COSTS – PLANETARY SATELLITES

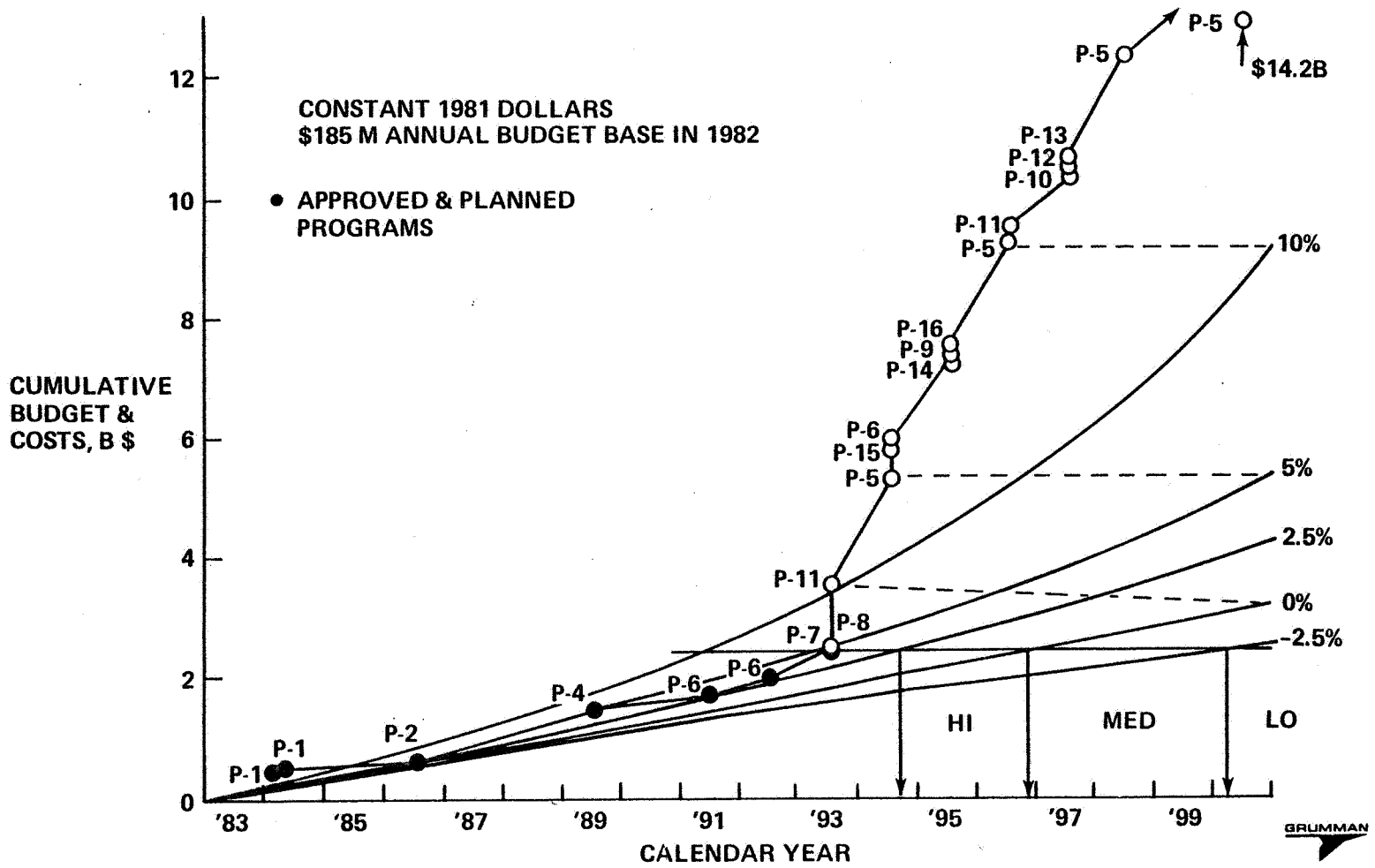

R81-2100-107W

ALTERNATIVE CUMULATIVE BUDGETS AND CUMULATIVE COSTS COMBINED SOLAR TERRESTRIAL AND ASTROPHYSICS SATELLITES

Cumulative projected budgets and cumulative program costs are shown in constant 1981 dollars for the combined solar terrestrial and astrophysics programs. The basic zero, plus and minus, 2.5% annual growth rate curves are augmented by a 5% growth line for added growth rate insight. Projection of a constant $295 M annual budget through the year 2000 would make a total of over $5 B available whereas the high (+2.5% per year) budget would provide nearly $6.5 B.

The cumulative costs of these two mission areas, versus years within the S/SUM/SOC model, are seen as the series of satellite identification numbers (ID Numbers) across the center of the chart. Note that the sequence of cost cumulation arbitrarily "launches" the astrophysics satellites first in each year. Again the cost curve moves out above the projected budgets including the added curve for 5% annual growth.

The costs of the S/SUM/SOC mission model clearly outstrip normal growth or priority distributions within the earth sensing, earth and space science and space testing mission categories. The end data point of $26.1 B in the upper right cornere is a factor of five larger than the cumulative constant budget projection. Changes in priorities within the combined solar terrestrial and astrophysics programs as relative to other mission areas within the three mission categories will serve to prevent excessive delays of most programs as implied by maintaining the S/SUM/SOC launch sequence and the budget ceilings.

ALTERNATIVE CUMULATIVE BUDGETS AND CUMULATIVE PROGRAM COSTS – COMBINED SOLAR TERRESTRIAL AND ASTROPHYSICS SATELLITES

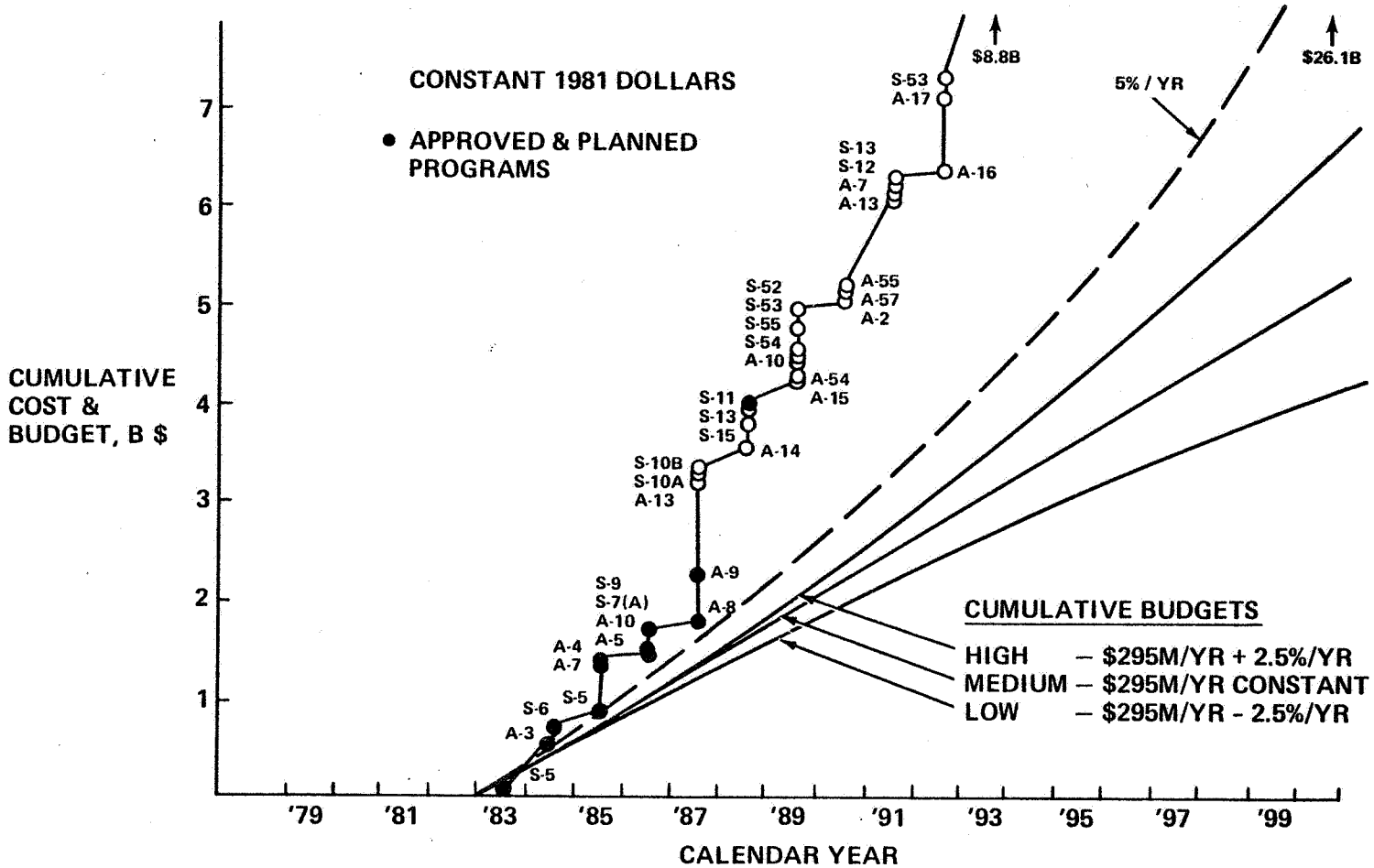

GRUMMAN

ALTERNATIVE CUMULATIVE BUDGETS AND CUMULATIVE PROGRAM COSTS - GLOBAL ENVIRONMENT SATELLITES

The budget projections and satellite program cost cumulations for Global Environment satellites is presented in constant 1981 dollars showing a similar trend of costs exceeding budget projections. This trend is again particularly strong in the 5-year period from 1988 through 1992. After the mid-'90s the S/SUM/SOC model shows limited numbers of satellites programmed providing a closer match between budgets and program costs.

Satellite E-9 (TOPEX) seen in this chart to be scheduled for late 1987 within S/SUM/SOC would be delayed until early 1993, mid 1994 or late 1996 within the high, medium and low budgets, respectively.

ALTERNATE CUMULATIVE BUDGETS AND CUMULATIVE PROGRAM COSTS– GLOBAL ENVIRONMENT SATELLITES

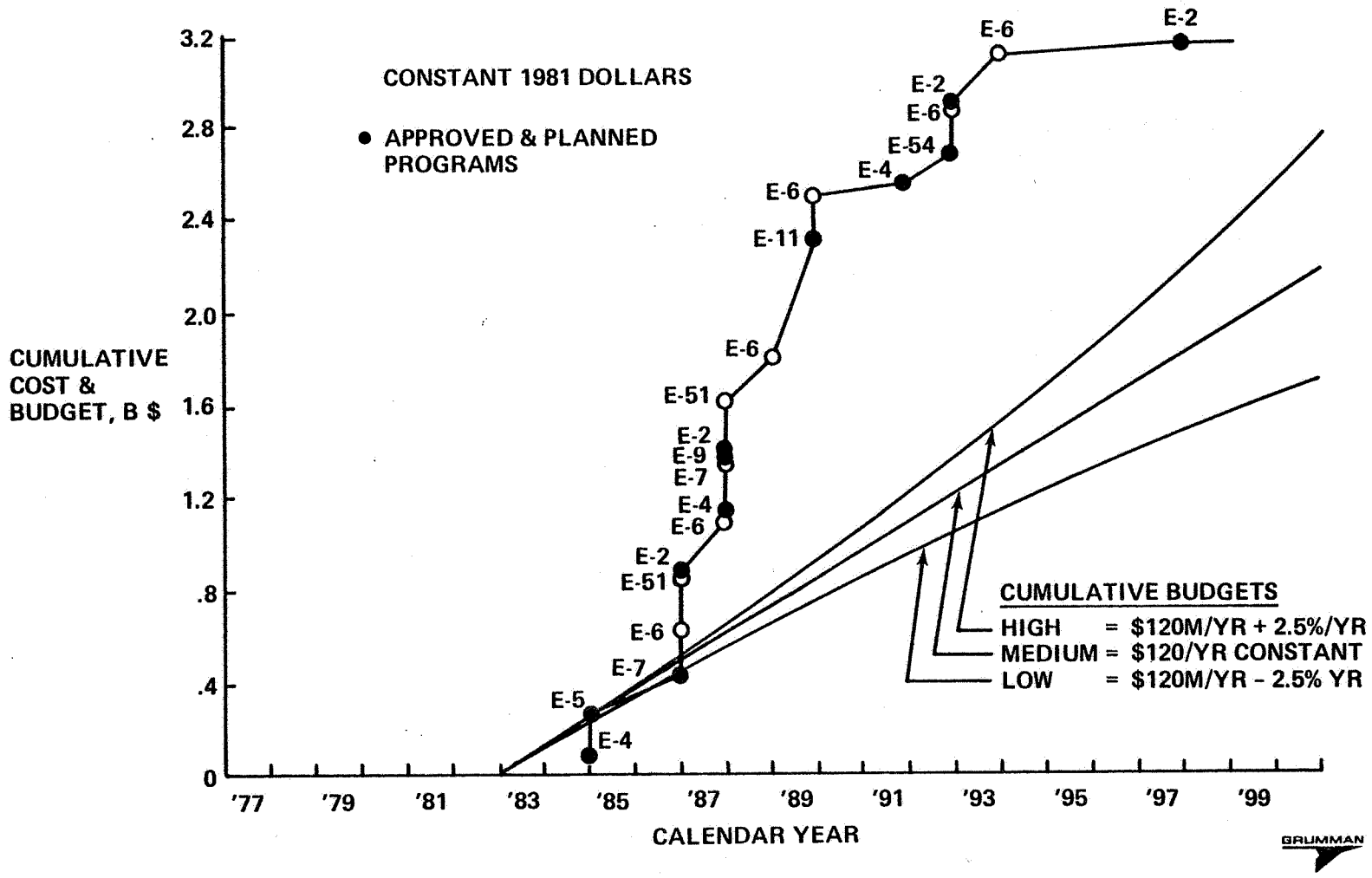

R81-2100-109W

ALTERNATIVE CUMULATIVE BUDGETS AND CUMULATIVE PROGRAM COSTS - RESOURCE OBSERVATION SATELLITES

The resource observation cumulative program costs are seen to start above budget in the early 1980s and never approach the trends of projected budget.

In the beginning of 1991 the cost of satellites launches on the S/SUM/SOC schedule exceeds $3.2 B while the high cumulative budget is less than $1.2 B. Due to the high apparent cost of the early satellites within this mission area only five launches in the sequence of S/SUM could occur before the year 1999 within the low budget projection. Even on the high budget projection this fifth launch (R-4 second launch) would be delayed until mid '94.

ALTERNATE CUMULATIVE BUDGETS AND CUMULATIVE PROGRAM COSTS— RESOURCE OBSERVATION SATELLITES

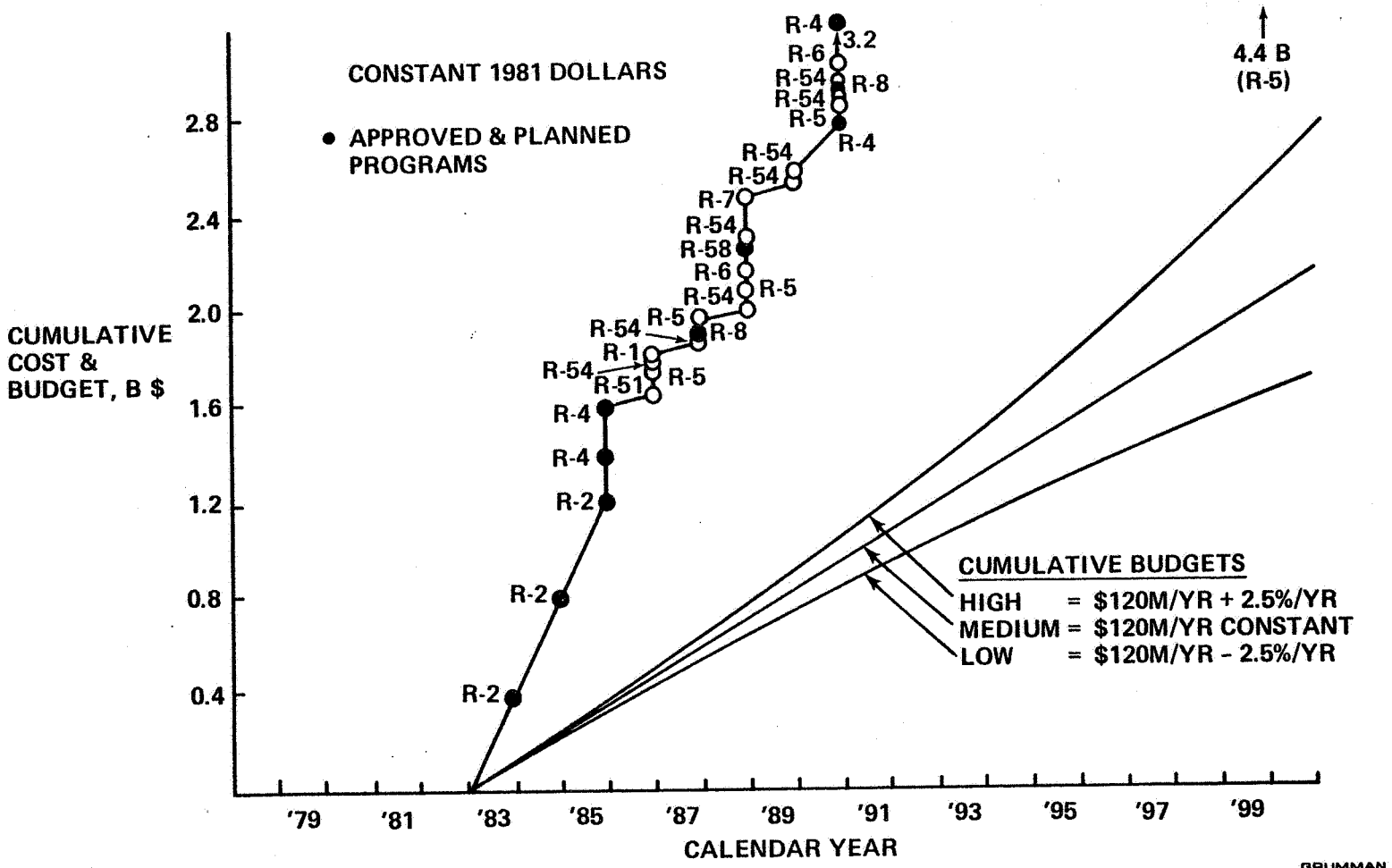

GRUMMAN

ALTERNATIVE CUMULATIVE BUDGETS AND CUMULATIVE PROGRAM COSTS - SPACE TESTING ARTICLES

Cumulative S/SUM/SOC program costs are presented in comparison with the three projected cumulative budgets. Costs in the early '90s exceed the high budget cumulative line by about 25% but fall back within this projection before the year 2000.

The relationship between cumulative mission program costs and the projected cumulative costs should show close correspondence. As discussed in conjunction with the Space Testing budget projection chart, the budget levels selected were guided partially by estimated costs within the S/SUM/SOC mission module.

ALTERNATIVE CUMULATIVE BUDGETS AND CUMULATIVE PROGRAM COSTS – SPACE TESTING ARTICLES

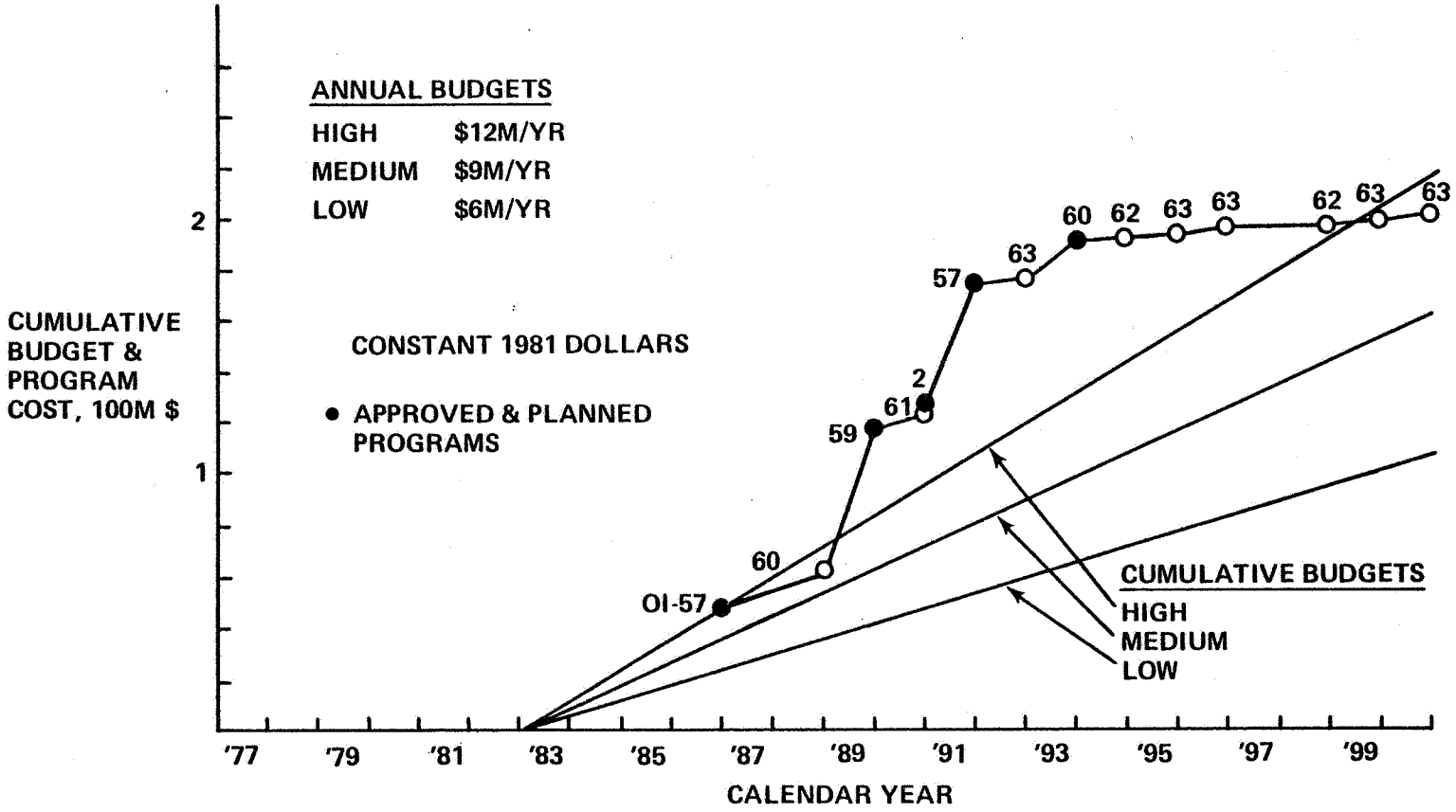

GRUMMAN

R81-2100-111W

TYPICAL WATERFALL EFFECTS OF BUDGET LIMITS

The effects of budget constraints on program schedules is cumulative both from the standpoint of depth of budget constraint and length of time the constraint is in effect. These effects on the NASA missions schedules are illustrated in the adjacent chart. Schedules on two astrophysics satellite programs, gamma ray observatory (GRO) and very long base line radio interferometer (VLBI) are presented for the S/SUM/SOC (full funding), and the high economic and low economic models are shown.

Astrophysics program A-7 (GRO) is planned for early launch in S/SUM/SOC (1985) and therefore should be least affected by cumulative budget constraints. It is seen at the middle of the chart the high budget model with growth at 2.5% per year above the FY 82 baseline still allows launch of A-7 in 1985. At the low budget level, corresponding to shrinkage at 2.5% per year below the FY 82 baseline, A-7 launch is delayed until 1988.

The VLBI satellite program, A-15, comes later in the S/SUM/SOC schedule with the initial launch shown for 1988 in the upper portion of the chart. At the high economic model budget level cumulative funds to support launch of A-15 (and all of those prior to it in the S/SUM/SOC model sequence) are not accrued until 1994. The combined effects of lower annual budget and this budget constraint over a longer time is seen for A-15 in the low economic model section of the chart indicating delay of first launch until 1999.

TYPICAL WATERFALL EFFECTS OF BUDGET LIMITS

IDENT	SAT NAME	MISS FUNCT	TRAFFIC BY YEAR 5 6 7 8 9 0 1 2 3 4 5 6 7 8 9 0
S/SUM/SOC			
A-7	GAMMA RAY OBSERVATORY	D	1
		S	•
		R	1
A-15	VERY LONG BASE INTERF	D	1 1
		S	• • • •
		R	1 1
HIGH ECONOMIC MODEL			
A-7	GAMMA RAY OBSERVATORY	D	1
		S	•
		R	1
A-15	VERY LONG BASE INTERF	D	1 1
		S	• • • •
		R	1
LOW ECONOMIC MODEL			
A-7	GAMMA RAY OBSERVATORY	D	1
		S	•
		R	1
A-15	VERY LONG BASE INTERF	D	1 1
		S	
		R	

D – DEPLOY, S – SERVICE, R – RETRIEVE

GRUMMAN

R81-2100-173B

EARTH & SPACE SCIENCE SATELLITE FLIGHTS - ECONOMIC MISSION MODELS

The budget impacts upon satellite launch frequency over the 1988 through 2000 time frame is summarized in the adjacent table for earth and space science satellite programs high, medium and low budget-constrained annual launch frequency is shown for the combined solar terrestrial and astrophysics mission area and for the planetary mission.

Annual total launch for the three budget levels show the effects of lower budgets, particularly in the 1990s. The total impact of the decreasing budget level is most apparent in cumulating the total annual launches over the 18-year model period. A total of 44 launches were available within the high budget, 39 under the medium model and 31 launches when constrained by the low budget model.

EARTH & SPACE SCIENCE SATELLITE FLIGHTS – ECONOMIC MISSION MODELS

FY	'88		'90		'92		'94		'96		'98		'00
HIGH MODEL (AT 2.5%/YR)													
SOLAR TERR & ASTRO	6	3	2	2	2	2	2	3	4	3	5	–	4
PLANETARY	–	–	1	1	1	2	1	–	–	–	–	1	–
TOTAL	6	3	3	3	3	4	3	3	4	3	5	1	4
MEDIUM MODEL (AT 0%/YR)													
SOLAR TERR & ASTRO	6	3	4	2	1	1	1	–	4	4	2	2	3
PLANETARY	–	–	–	1	1	–	1	1	–	1	1	–	–
TOTAL	6	3	4	3	2	1	2	1	4	5	3	2	3
LOW MODEL (AT -2.5%/YR)													
SOLAR TERR & ASTRO	3	7	3	3	1	1	1	1	–	3	–	3	–
PLANETARY	–	–	–	–	1	–	1	–	1	–	–	–	2
TOTAL	3	7	3	3	2	1	2	1	1	3	–	3	2

GRUMMAN

EARTH SENSING SATELLITE FLIGHTS - ECONOMIC MISSION MODELS

The annual mission rate for the earth sensing mission category satellite flights is presented in the adjacent figure. In this mission category significant numbers of satellite flights are financed by foreign orginizations, commercial interests and other U.S. Government agencies, and are therefore independent of NASA budget projection levels. These annual flight rates are summarized separately at the bottom of the chart.

Launch rates for the three budget level. models for global environment and Resource Observation are shown in the three data groups above. Total annual NASA funded launches may be seen at a glance to drop significantly as the constraints are increased from the high to medium to low model. These decreases in annual flight rates reflect in the 18 year flight totals which drop from 32 launches under the high budget to only 14 under the low budget constraints.

The non-NASA Earth Sensing missions (foreign, commercial & DOE) are seen to increase significantly in the late '90s. These added missions are the projected DOE nuclear waste disposal missions at 10 per year after 1987.

EARTH SENSING SATELLITE FLIGHTS – ECONOMIC MISSION MODELS

FY	'88		'90		'92		'94		'96		'98		'00
HIGH MODEL (AT +25%/YR)													
GLOBAL ENVIRONMENT	–	2	1	1	2	1	1	1	–	–	1	1	2
RESOURCE OBSERVATION	–	1	–	1	–	1	2	3	4	2	2	2	1
TOTAL	–	3	1	2	2	2	3	4	4	2	3	3	3
MEDIUM MODEL (AT 0%/YR)													
GLOBAL ENVIRONMENT	1	–	2	–	2	1	2	–	1	–	1	–	–
RESOURCE OBSERVATION	–	–	1	–	1	–	1	–	2	2	3	2	2
TOTAL	1	–	3	–	3	1	3	–	3	2	4	2	2
LOW MODEL (AT -2.5%/YR)													
GLOBAL ENVIRONMENT	1	–	–	2	–	1	1	–	2	1	–	1	–
RESOURCE OBSERVATION	–	–	1	–	–	–	1	–	1	–	–	1	1
TOTAL	1	–	1	2	–	1	2	–	3	1	–	2	1
FOREIGN, COMML & DOE	3	4	3	4	4	4	4	7	8	15	13	14	10

GRUMMAN

R81-2100-083W

SPACE TESTING SATELLITE FLIGHTS ECONOMIC MODELS

The flight activity levels for the three budget levels projected for this mission category are summarized in the opposite page table. The drop in numbers of missions per year is obvious as the high budget of $12 M/yr drops to $9 M/yr in the medium model and to $6 M/yr at the projected low level.

Total missions for the 18 year period drop successively from 15 to 8 to 7 for the high, medium and low budget models respectively.

SPACE TESTING SATELLITE FLIGHTS ECONOMIC MISSION MODEL

CY	'88		'90		'92		'94		'96		'98		'00
HIGH MODEL ($12M/YR) SPACE TESTING	–	1	1	–	1	2	–	–	2	2	4	1	1
MEDIUM MODEL ($9M/YR) SPACE TESTING	1	2	1	–	–	1	–	–	2	–	1	–	–
LOW MODEL ($6M/YR) SPACE TESTING	–	1	2	–	–	2	–	–	–	–	1	–	1

GRUMMAN

SOC MISSION MODELS
RESEARCH AND APPLICATIONS ON BOARD SOC

Three representative mission categories were analyzed in this sector. These are life sciences, materials processing, and DOD and technology space testing of subsystems, instruments and technologies.

A review of the so-called blue books from the space station studies of the early 1970s suggested that mission activities in other areas such as space physics and communications would be relatively insignificant and not worth the investment of time and effort to create mission models. These kinds of activities can generally be aggregated under the DOD and technology category.

SOC Mission Models

Research & Applications Onboard SOC

- Life Sciences
- Materials Processing
- DoD & Technology Space Testing

LIFE SCIENCES MISSION MODEL RATIONALE

Three models were created for these types of missions, as was the case for the other sectors. In life sciences, the low model was designed to satisfy those research objectives most essential to routine long-term manned space operations. These research objectives would be essential to a long-term program intended to eventually use manned systems for military purposes. These systems will require routine and highly effective operations with long crew stay times.

The median model included some additional research objectives of a more academic nature; objectives related to understanding the effects of microgravity, and other aspects of the space environment, on a variety of living organisms. These research objectives may also have a practical application inasmuch as the well being of other living organisms in space may eventually be of importance to permanent human settlements in space.

The high model was designed to satisfy all presently identified microgravity life sciences objectives, excepting those requiring a human centrifuge. (The human centrifuge was considered to be an unreasonable requirement to impose on a space station in the SOC class.) Note that even the high model does not address research objectives that might be identified in the future. It may be presumed that some such objectives of high priority would displace objectives presently recognized, but of lower priority.

Life Sciences Mission Model Rationale

Low Model - • Satisfies those research objectives most essential to routine long-term manned space operations.

Median Model - • Includes additional research objectives of a more academic nature.

High Model - • Satisfies all presently-identified microgravity life sciences objectives except those requiring a human centrifuge.

SOC ADVANTAGES FOR LIFE SCIENCES RESEARCH

Only very limited life sciences research can be conducted on short space missions. The existence of a manned station would permit research on the various long-term exposure effects for meaningful time periods. The flexibilityof a permanently-occupied station would permit a diversity of research carried out over a long sustained period. It would also provide collection of medical data for 90 days or more on human beings. Operation in a laboratory mode would provide flexibility of in-situ modifications of experiment protocols and the introduction of new and varied experiments as the research was conducted. This would also provide the opportunity for fixing things if malfunctions occur and the experiment is put in jeopardy. The relative flexibility of timelines and operations in a permanently-manned station will allow the accomplishments of research at considerably less cost than would be required for operations in which detailed advanced plans must be prepared and followed meticulously.

SPACE OPERATIONS CENTER

NASA

SOC-1566

SOC Advantages for LS Research

BOEING

- Permits research on long term exposure effects
- Permits a diversity of research over a long sustained period
- Provides a collection of medical data for 90 days (or more) per individual
- Provides for flexibility of in situ modifications of experiment protocols
- Permits the introduction of new experiments
- Provides the opportunity of "fixing things" if something malfunctions and the experiment is put in jeopardy

LIFE SCIENCES MISSION MODELS

The facing page presents the life sciences mission models that were developed as a result of the life sciences investigation.

SPACE OPERATIONS CENTER

NASA

SOC-1446

Materials Processing Mission Model

BOEING

		CALENDAR											
		89	90	91	92	93	94	95	96	97	98	99	00
LOW	NUMBER OF PROCESSES IN DEVELOPMENT						1	1	1	1	1	1	1
	RESEARCH MAN LEVEL	0.1	0.1	0.25	0.25	0.25	0.25	0.25	0.25	0.25	0.25	0.25	0.25
	DEVELOPMENT MAN LEVEL						2	2	2	2	2	2	2
MEDIAN	NUMBER OF PROCESSES IN DEVELOPMENT				1	1	2	2	2	2	2	2	2
	RESEARCH MAN LEVEL	0.1	0.1	0.1	0.5	0.5	0.5	1	1	1	1	1	1
	DEVELOPMENT MAN LEVEL				1	1	2	2	2	2	2	2	2
HIGH	NUMBER OF PROCESSES IN DEVELOPMENT			1	1	2	2	4	4	4	4	4	4
	RESEARCH MAN LEVEL	0.25	0.25	1	1	2	2	2	2	2	2	2	2
	DEVELOPMENT MAN LEVEL			2	2	2	2	4	4	4	4	4	4
	PRODUCTION MAN LEVEL (FREE-FLYER TENDING)										0.5	0.5	0.5

MATERIALS PROCESSING EVOLUTION

The field of microgravity materials processing is presently in an early experimental research stage. This activity has been carried out on past space missions as well as in aircraft, drop towers and sounding rockets. A number of such experiments are planned for shuttle and space lab flights in the 1980s. The facing page illustrates the evolution of this present phase of research into phases of process development toward commercially viable processes, and finally commercial manufacturing of products for the free marketplace. The main characteristics of these phases of development are also indicated in the figure.

SPACE OPERATIONS CENTER

NASA

SOC-1518

Changes in Operational Requirements

BOEING

EXPERIMENTAL RESEARCH	PROCESS DEVELOPMENT	COMMERCIAL MANUFACTURING
ON BOARD SOC →		STATIONKEPT
SMALL "SUITCASE" EXPERIMENTS, MULTIPURPOSE RESEARCH MODULES, AND PALLETS	DEDICATED-PURPOSE PROCESS DEVELOPMENT MODULE →	DEDICATED-PURPOSE COMMERCIAL MANUFACTURING FREE-FLYER
NASA-SPONSORED →		PROPRIETARY COMMERCIAL SYSTEMS
PERIODIC ATTENTION BY SOC CREW →	FULL-TIME "COMPANY" RESEARCHERS →	PERIODIC ATTENTION BY THE SOC CREW IN SATELLITE SERVICING MODE

820063-029

MATERIALS PROCESSING MISSION MODEL RATIONALE

The low model for materials processing employs primarily an extrapolation of Spacelab research plans presently in existence. It was estimated that a process development activity would begin in 1994, aimed at eventual commercialization.

The median model assumes that the existence of a permanent manned station would simulate additional research activity over that planned for Spacelab, and that process development could begin in 1992.

The high model represents a moderately aggressive program to develop commercial processes. Process development begins in 1991, about as early as could be expected with a space station launched in 1989 or 1990. It assumes that four parallel process development activities are in progress by 1995, and that the first commercial production free-flyer is launched in 1998.

Materials Processing Mission Model Rationale

Low Model -
- Extrapolation of Spacelab research plans
- Process development activities begin in 1994.

Median Model -
- Assumes existence of SOC would stimulate additional research activity.
- Process development begins in 1992.

High Model -
- Represents moderately aggressive program to develop commercial processes
- Process development begins in 1991
- Four process development efforts in progress by 1995
- Commercial production free-flyer launched in 1998

PROCESS DEVELOPMENT ON SOC VERSUS SHUTTLE

Process development represents a venture of commercial risk capital, to develop a proprietary process from which returns will be obtained when the process is fully developed, automated and commercialized. Accordingly, time is of the essence. It is very important that the process development be expected to reach a successful conclusion in relatively few years. Otherwise, the commercial return on investment will not be sufficiently attractive to merit a risk capital investment. The presence of a continuously-manned station can be expected to reduce the process development time from one likely to be unattractive commercially to one probably attractive commercially. The process development time on a permanently-manned station would be not greatly more than a comparable process development on Earth.

SPACE OPERATIONS CENTER

NASA

BOEING

SOC-1236

Process Development on SOC Versus Shuttle

	LOW	MED	HIGH
TEST RUNS	150	1000	3000
MODIFICATIONS	1	4	10
SHUTTLE FLIGHTS†	10	66	200
YEARS REQUIRED ‡ (SHUTTLE)	2.5	16	50
YEARS REQUIRED ‡‡ (SOC)	.75	2.5	8
YEARS ON EARTH	.5	1.5	5

† BASED ON 15 RUNS PER FLIGHT

‡ BASED ON 4 FLIGHTS PER YEAR

‡‡ FOR COMPARISON ONLY

MATERIALS PROCESSING MISSION MODEL

The facing page presents the principal statistics for the low, median and high models in terms of the number of processes and development, as well as the space station man level dedicated to research and to process development.

Materials Processing Mission Model

		CALENDAR											
		89	90	91	92	93	94	95	96	97	98	99	00
LOW	NUMBER OF PROCESSES IN DEVELOPMENT						1	1	1	1	1	1	1
	RESEARCH MAN LEVEL	0.1	0.1	0.25	0.25	0.25	0.25	0.25	0.25	0.25	0.25	0.25	0.25
	DEVELOPMENT MAN LEVEL						2	2	2	2	2	2	2
MEDIAN	NUMBER OF PROCESSES IN DEVELOPMENT				1	1	2	2	2	2	2	2	2
	RESEARCH MAN LEVEL	0.1	0.1	0.1	0.5	0.5	0.5	1	1	1	1	1	1
	DEVELOPMENT MAN LEVEL				1	1	2	2	2	2	2	2	2
HIGH	NUMBER OF PROCESSES IN DEVELOPMENT			1	1	2	2	4	4	4	4	4	4
	RESEARCH MANLEVEL	0.25	0.25	1	1	2	2	2	2	2	2	2	2
	DEVELOPMENT MAN LEVEL			2	2	2	2	4	4	4	4	4	4
	PRODUCTION MAN LEVEL (FREE-FLYER TENDING)										0.5	0.5	0.5

DOD AND TECHNOLOGY SPACE TESTING

The facing page presents a summary of the DOD and technology space testing models. These represent continuations of present trends in space testing. It is assumed that the Space Operations Center would provide those services now provided by spacecraft busses or shuttle. Crew involvement would be primarily for experiment tending. These experiments would generally be mounted on pallets and berthed to a Space Operations Center berthing port. The required crew involvement is relatively minimal since most of the testing would simply be accomplished by relaying data to the ground.

SPACE OPERATIONS CENTER

NASA

SOC-1447

DoD & Technology Space Testing

BOEING

- CONTINUATION OF PRESENT TRENDS IN SPACE TESTING
- SOC PROVIDES THOSE SERVICES NOW PROVIDED BY SPACECRAFT BUS OR SHUTTLE
- EXPERIMENT–TENDING OPERATIONS

	89	90	91	92	93	94	95	96	97	98	99	00
LOW MODEL MAN LEVEL	0.1	0.1	0.1	0.1	0.2	0.1	0.2	0.1	0.2	0.1	0.2	0.1
MEDIAN MODEL MAN LEVEL	0.2	0.2	0.7	0.3	0.7	0.7	0.7	1	1	1	1	1
HIGH MODEL MAN LEVEL	0.2	0.2	0.7	0.3	1	1	1	1	1	1	1	1

SOC MISSION MODELS COMMUNICATIONS SECTOR

The following several charts present the derivation and character of the communications traffic models.

Communications Sector

THE ECONOMIC TRENDING CONCEPT

The commercial communications sector model was derived from an economic-technical rationale based on historical experience and technological projections.

New technologies introduced to the marketplace often generate a very high rate of economic growth over a substantial number of years. Rapid economic growth occurs, as lower costs made possible by the new technology cause rapid acquisition of a significant market sector for whatever service or product is offered. Examination of historical data suggests that the process begins with an infancy period in which the growth is erratic and often at very high rates. Then an adolescent period occurs, in which the growth rate is more predictable but still quite rapid. This is followed by a period in which the new industry has reached maturity and its growth generally parallels the gross national product. Many industries eventually reach an old age period when growth subsides and decline takes place, even in some instances, entirely phasing out an industry. The trending concept illustrated on the facing page represents this rationale and is based on an examination of historical development of market sectors.

SPACE OPERATIONS CENTER

The Economic Trending Concept

NASA BOEING

SOC-1184

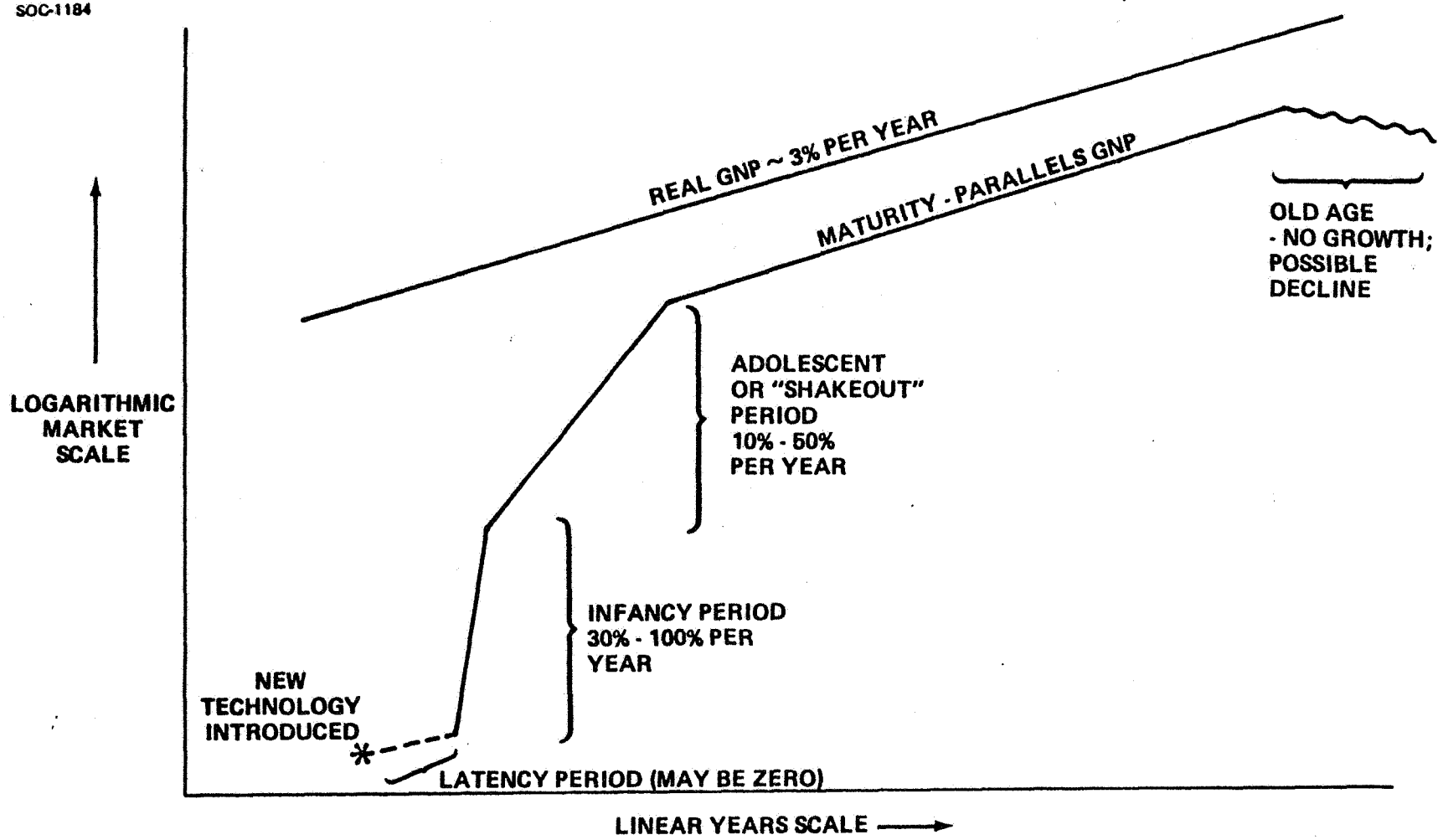

HISTORICAL GROWTH IN THE TRANSPORTATION SECTOR

A few years ago the Boeing Commercial Aircraft Company performed a study of historical growth and development in the transportation sector. Four principal industries were examined dating all the way back to clipper ships. The data presented in the figure are on a semi-logarithmic scale. In each instance, as illustrated on the facing page, the transportation sector exhibited a period of rapid growth, followed by a leveling-off paralleling the gross national product. In all instances, these rapid growth periods represented the adolescent or shakeout period; very early history was not presented. The annual growth rates for the motor car and airline operations are on the order of 50% per year for 20 to 30 years. The items plotted represent delivered services or products. The growth rates presented are for growth in market quantity. Inasmuch as costs per unit were being reduced over this period, the growth rates in actual market value would be less.

SPACE OPERATIONS CENTER

Historical Growth in the Transportation Sector

NASA SOC-1451 BOEING

1840-1978

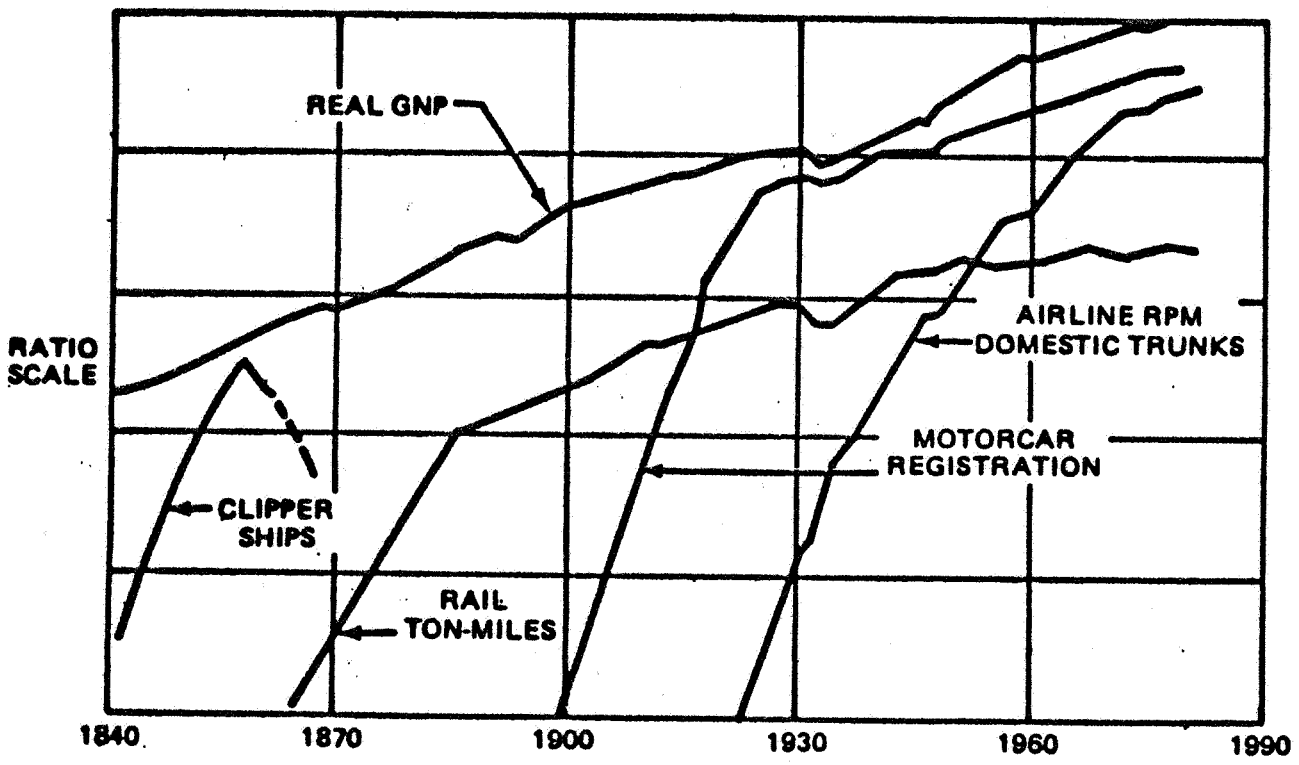

Sources: Historical Statistics of the U.S., Colonial Times to 1970
U.S. Dept. of Commerce

HISTORICAL TELECOMMUNICATIONS

Illustrated on the facing page is the number of installed telephones versus time for the U.S. telephone industry. The infant and adolescent rapid growth periods are clearly discernible. Since 1940 the growth has been nearly parallel to the gross national product. However, it is worthy of note that for 24 years the average growth rate was 39% per year. What began as a novelty in the late 19th century grew into one of the principal economic sectors in the U.S. economy today, with over 200 million telephones installed across the United States.

SPACE OPERATIONS CENTER

NASA

SOC-1275

Historical Telecommunications Growth

BOEING

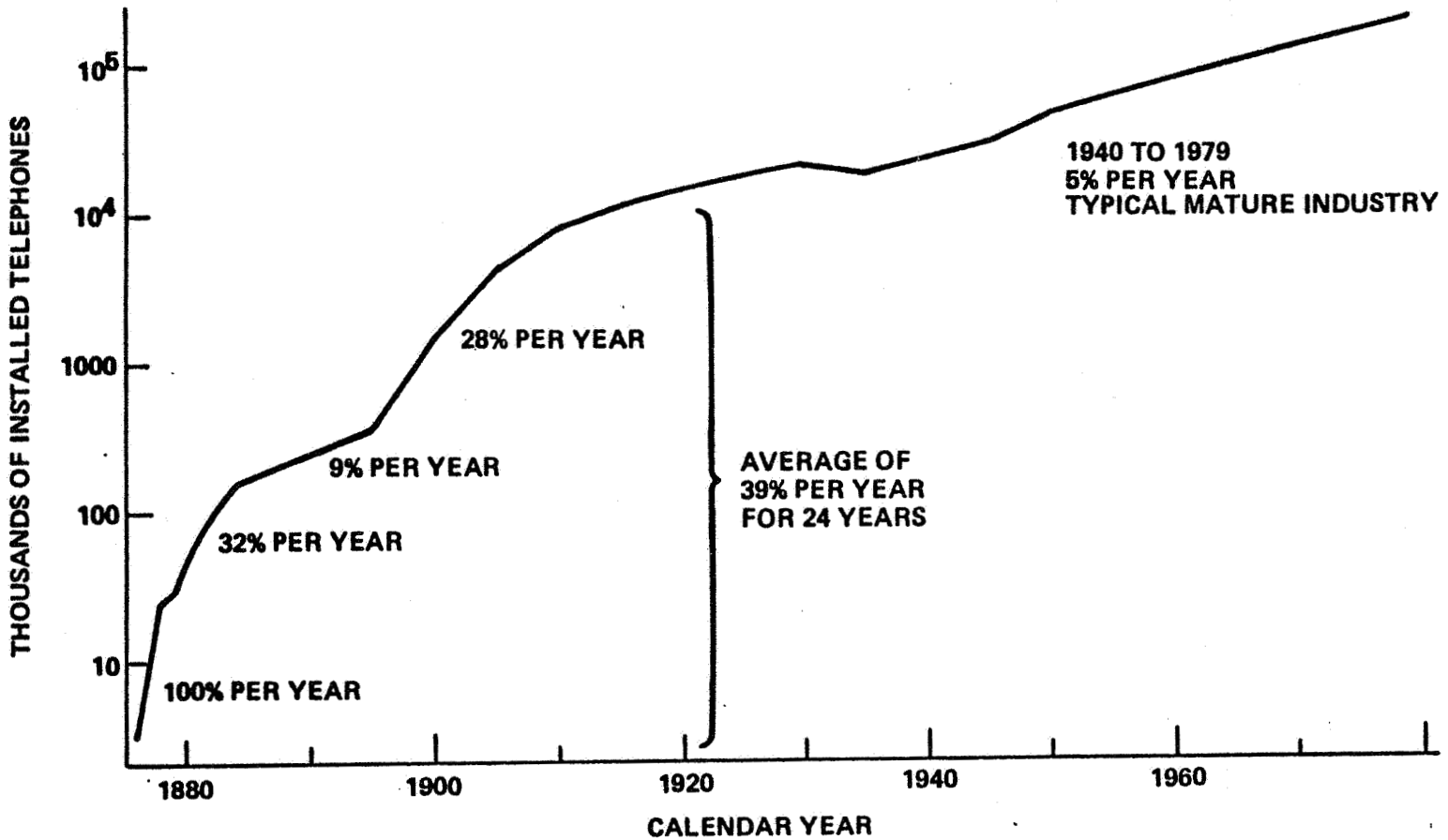

SPACE TELECOMMUNICATIONS CONCEPT

The facing page presents the space telecommunications model created as a part of this study. The economic trending concepts described earlier were used. This model presumes that space communications will acquire a larger and larger sector of the entire telecommunications marketplace until it reaches market saturation sometime in the future. In consonance with the idea of creating low, median and high models, three growth rate levels were presumed. The data on the chart represent the values actually used in the model.

The structure of the model projects economic developments in terms of investment in the industry, and technical trends in terms of technological improvements. These two sets of assumptions then allow derivation of the number and type of satellites launched. Information shown on the chart includes the following model elements: (1) Growth of total telecommunications, representing a ceiling for acquisition of market share by space telecommunications. (2) Growth rates for the space telecommunications sector of the market. (3) The value of the space segment part of the space telecommunications system, this representing the actual value of assets placed in space. It is important to recognize that as the marketplace matures the fraction of the total investment in space telecommunication systems actually launched in space will decline. This is already taking place with the proliferation of ground receivers for television distribution. (4) The cost of spacecraft and space transportation, both expected to gradually decline on a unit mass basis over the next 20 years. The figures used for space transportation costs in the year 2000 are appropriate to a shuttle with a reusable, aerobraked, high-energy orbit transfer vehicle. (Projections utilized in this study did not presume radical advances in space transportation such as fully reusable heavy lift systems or advanced technology propulsion.) (5) Payload mass per representative transponder based on results of the General Dynamics study of space platforms. (6) The spacecraft bus to payload ratio, also as estimated by the General Dynamics study, is expected to improve as size increases. (7) The representative spacecraft mass is expected to increase to the platform class by the year 2000. The size of the platform was varied as a function of the traffic models. (8) The representative spacecraft life is expected to gradually increase to 15 years. (9) Since this model is for U.S. space operations, a projection was made that the U.S. market share for total telecommunications launches would decrease from the present near 100% to about 50%.

SPACE OPERATIONS CENTER

NASA

SOC-1183

Space Telecommunications Model Concept

BOEING

ECONOMIC TRENDING

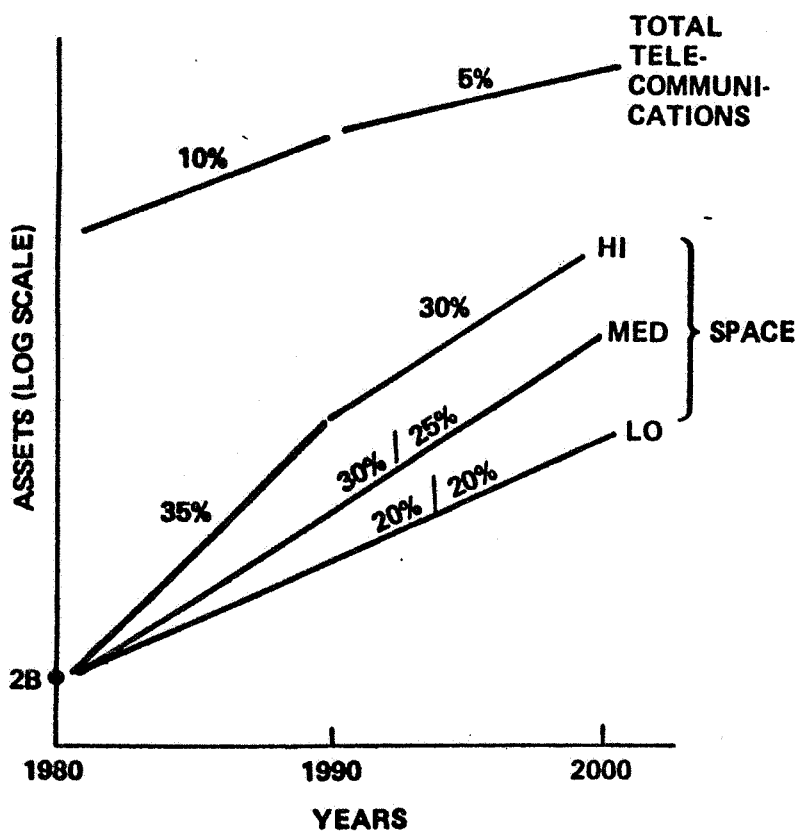

MODEL ELEMENTS

VALUE, 1980		VALUE, YR 2000 LOW	MED	HI
	VALUE OF SPACE SEGMENT, % OF TOTAL			
50%		20%	10%	10%
	SPACECRAFT COST, $/kg			
25000		14500	13500	10000
	SPACE TRANSPORTATION COST, $/kg			
20000		11000	7200	5000
	PAYLOAD MASS PER TRANSPONDER			
10 kg		3	3	3
	BUS/PAYLOAD RATIO			
3		2	2	2
	REPRESENTATIVE S/C MASS			
1000 kg		3000 Kg	4000 Kg	15000 Kg
	REPRESENTATIVE S/C LIFE			
7 YR		15 YR	15 YR	15 YR
100%	U.S. MARKET SHARE OR TOTAL TELECOM. LAUNCHES	50%	50%	50%

INTELSAT SERIES DEMONSTRATES THE ECONOMY OF SCALE AND COMMUNICATIONS SPACECRAFT

This parametric plot taken from the General Dynamics platform study illustrates the decrease in space segment cost per transponder-year, both historical and projected, for a variety of platforms. The noted circles on the chart represent the results of our parametric trending models. The circles are about a factor of two above the General Dynamics curve because our cost per transponder-year included capital charges, whereas the General Dynamics data did not.

SPACE OPERATIONS CENTER

Intelsat Series Demonstrates Economy of Scale in Communications Spacecraft

NASA — BOEING

SOC-1568

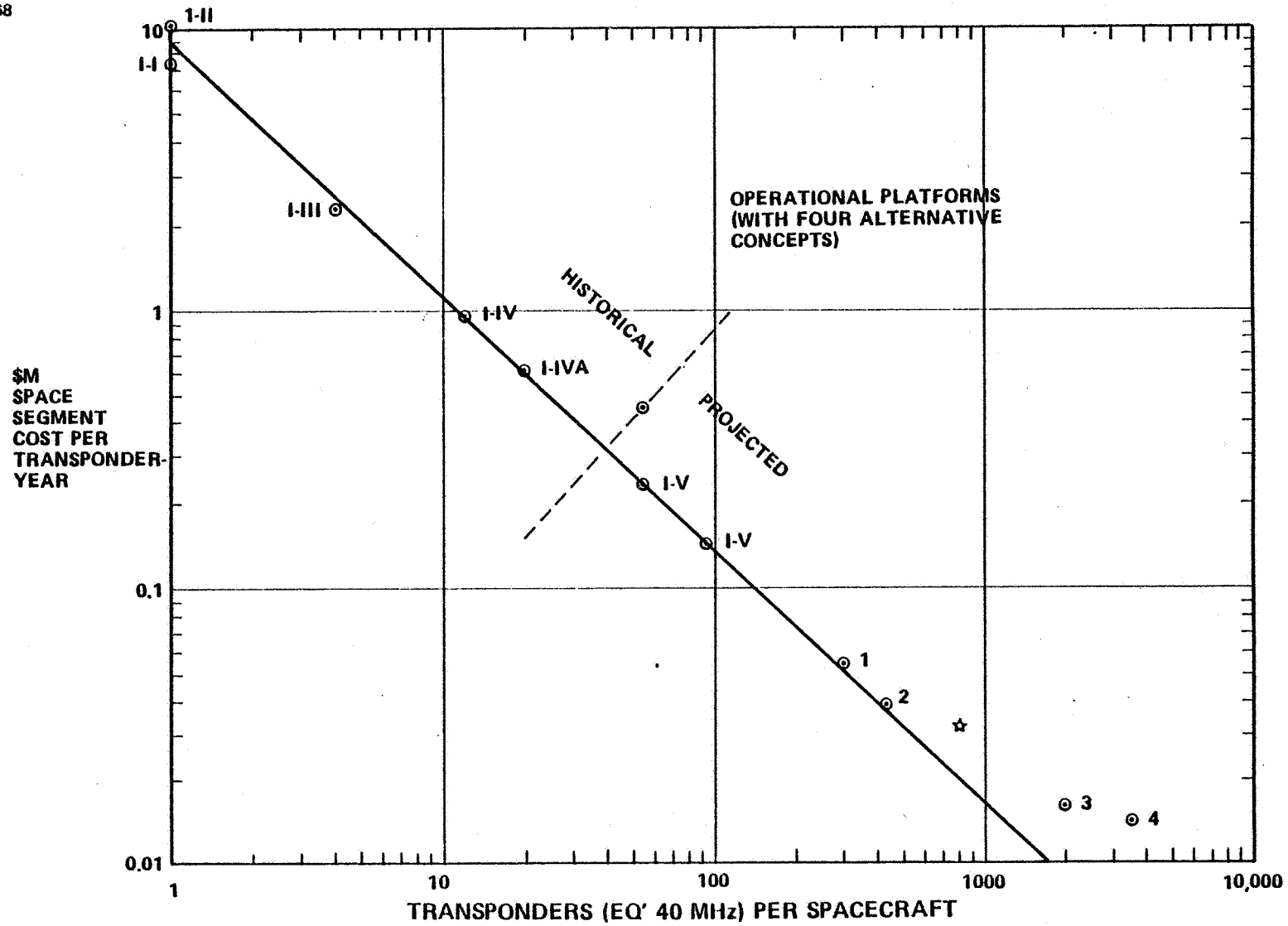

ASSUMED CHARACTERISTICS OF COMMUNICATIONS SATELLITES

In order to finalize the payloads launch forecast the parametric results from the model were made specific by projecting a range of satellite sizes that might be launched in the next 20 years. The facing page presents the assumed characteristics of the satellites including estimates of the type of service and the sizes and lengths necessary to conduct the analyses to be described on future pages.

SPACE OPERATIONS CENTER

NASA

SOC-1212

Assumed Characteristics of Communications Satellites

BOEING

MASS (TONNES)	MODEL	UPPER STAGE	SERVICE CLASSES	DIA.	LENGTH	SOC SERVICE
1	INTELSAT V; LEASAT	SSUS	POINT-TO-POINT TRUNKING	3	2.8	NONE
2	TDRSS	IUS	POINT-TO-POINT; DATA RELAY; DIR BC	3	5.6	NONE
3	GROWTH TDRSS	UPRATED IUS; IOTV	(SAME)	4	5	TEST
4	MINI-PLATFORM	IOTV	(SAME)	4.4	5	DEPLOY & TEST; STORE; MATE
5	MINI-PLATFORM	A/B OTV	SAME PLUS USER-PREMISES SERVICES	4.4	6.6	SAME
7	PLATFORM	A/B OTV	ADD MOBILE SERVICE	4.4	9.2	ASSEMBLE & TEST; MATE
10	PLATFORM	A/B OTV	SAME	4.4	13.2	SAME

TELECOMMUNICATIONS MODELS

The final telecommunications models were completed by making the parametric economic model results specific in terms of numbers of spacecraft of different sizes to be launched every year. The progression to larger and larger spacecraft was forecast to be gradual with a new, larger, size of spacecraft introduced every two to five years, much as has been true in the past. The high model is forecast to grow to bigger spacecraft than the median or low models. Overlap was forecast to occur with as many as three different classes of spacecraft being launched simultaneously in some years. This also is typical of present systems.

By way of interest the number of communications satellites actually launched in 1981 will be eight, and about five of those will be one-ton class with the other somewhat smaller. Launches of a two-ton class will begin with the initial launches of TDRSS.

SPACE OPERATIONS CENTER

Telecommunications Models

NASA — BOEING

SOC-1253

	MASS (TONNES)	81	82	83	84	85	86	87	88	89	90	91	92	93	94	95	96	97	98	99	00
		CALENDAR YEAR																			
HIGH MODEL	1	5	3	5	5	5	4														
	2		2	2	3	3	4	4	3												
	3					1	2	5	9	10	10	5									
	4									2	5	6	10	10	7	5					
	5											2	5	5	7	8	7	5			
	7													2	5	7	15	20	28	28	23
	10																	1	2	5	15
	TOTAL	5	5	7	8	9	10	9	12	12	15	13	15	17	19	20	22	26	30	33	38
MEDIAN MODEL	1	5	3	4	3	3	5	2	2												
	2		1	1	2	3	3	4	5	2											
	3							1	2	6	9	6	8	8	7	8	6	2			
	4											1	1	2	3	4	6	11	14	12	15
	7																1	1	2	3	4
	TOTAL	5	4	5	5	6	8	7	9	8	9	7	9	10	10	12	13	14	16	15	19
LOW MODEL	1	3	2	2	3	3	4	3	4	3	2										
	2		1	1	1	2	2	3	3	3	5	5	5	5	1						
	3									1	1	1	3	3	7	6	7	8	8	9	11
	5															1	2	2	3	3	4
	TOTAL	3	3	3	4	5	6	6	7	7	8	6	8	8	8	7	9	10	11	12	15

COMMUNICATIONS TRAFFIC MODEL MASS RATE

A traffic model for space communications was developed in the earlier SOC study. The annual mass delivered in this earlier model is represented by the squares on the graph. The new models are also presented on the same chart.

SPACE OPERATIONS CENTER

Communications Traffic Model

NASA

SOC-1233

BOEING

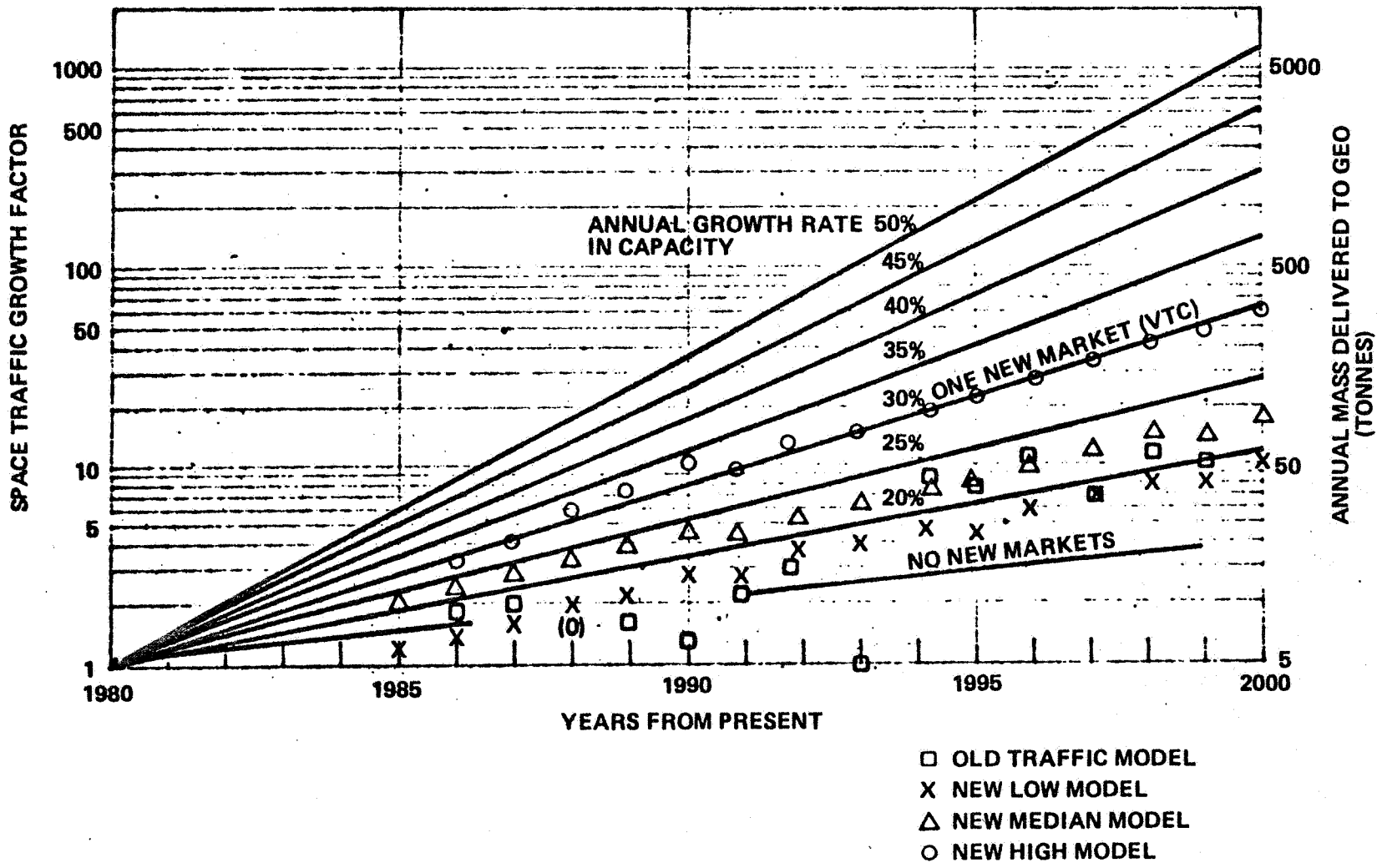

EQUIVALENT TRANSPONDERS COMPARISON

The facing page presents a comparison of total cumulative equivalent transponders launched for the three mission models of the present study, and for a mission model created by Econ for the United States only, including video teleconferencing. In the Econ data, the term "equivalent transponders" includes only bandwidth considerations. In the present model, the term "equivalent transponders" includes bandwidth, power, and complexity factors, inasmuch as some future services may require additional mass per transponder for high gain multi-beam antennas, more complex switching systems, more power as for direct broadcast TV, or higher complexity associated with dividing a given transponder bandwidth into a large number of individual user-premises communication links.

The present traffic models trend higher than the Econ forecast. However, the Econ forecast included only one new demand segment, that of video teleconferencing. Historically, a new application of space communications has arisen every two to four years. Some services not included in the Econ forecast but now either on the horizon or technically feasible include direct broadcast TV. Direct broadcast TV with standard bandwidth is now in the planning stage with filings for over 20 satellite slots presently before the Federal Communications Commission. The Japanese are working on a wideband TV system using 3,000 or so scan lines instead of the 525-line U.S. standard. It is reported that this wideband TV provides a picture comparable in quality to technicolor movies. The bandwidth requirement would be something like 10 to 20 times that for standard TV broadcast. This very great bandwidth per channel would be probably feasible only with an advanced satellite direct broadcast system.

A wide variety of user-premises on-request services are technically feasible. Based on projected cost trends, direct satellite linking for home and small business computers could be less costly than installing a second telephone line to provide the same service. The communications cost for such services would be small compared to the charges normally accrued for the data services themselves. Even such applications as on-request stereo music broadcast or TV entertainment broadcast should be technically and economically feasible before the year 2000.

SPACE OPERATIONS CENTER

NASA

SOC-1538

"Equivalent Transponders" Comparison

BOEING

"EQUIVALENT TRANSPONDERS" INCLUDES BANDWIDTH, POWER, AND COMPLEXITY FACTORS

MISSION MODEL		1980	1985	1990	1995	2000
LOW	WORLD-WIDE	550	1380	4200	14000	48000
MEDIAN	WORLD-WIDE	550	1760	7000	23000	82000
HIGH	WORLD-WIDE	550	2300	12000	54000	250000
ECON (U.S. ONLY, INCLUDING VIDEO TELECONF.		200	500	5000	10000	NO FORECAST

SERVICES NOT INCLUDED IN ECON FORECAST

- DIRECT BROADCAST TV
  - STANDARD
  - WIDEBAND
- USER-PREMISES ON-REQUEST SERVICES
  - DATA & INFORMATION
  - ENTERTAINMENT

DEFENSE SECTOR

The defense sector represents another significant demand area.

Defense Sector

MILITARY MISSION MODEL CONSIDERATIONS AND ASSUMPTIONS

In the creation of an unclassified military mission model, the available DOD sources cannot be utilized because they are classified, with even some names of payloads classified. Almost all of the size and mass data necessary for a specific analysis were also classified. Finally, these plans do not generally predict far enough into the future to be very useful for a SOC mission model in which payload activity would begin about 1990. Unclassified sources permit projection of general types of missions.

Because we could not use classified models, we developed a budget-driven model that we feel is realistic. Again, three levels were developed; low, median and high.

We employed a simplification of not considering the WTR launches excepting in our projection of the total demand for space transportation. These launches are presumed to use 40% of the available launches and represent 70% of the launched spacecraft mass inasmuch as WTR launches generally are destined for relatively low Earth orbits, whereas ETR launches are typically destined for geosynchronous orbit; the spacecraft mass that can be launched with a shuttle flight is substantially less than that for WTR. Finally, for purposes of analysis it was assumed that all ETR launches go to geosynchronous orbit. Even though some may go to other orbits, all of the high energy orbits represent approximately the same transportation challenge.

SPACE
OPERATIONS
CENTER

NASA

SOC-1457

Military Mission Model
Considerations and Assumptions

BOEING

- Can't use STS utilization plan
  - Classified data
  - Does not project far enough into future
- Budget - Driven mission model most realistic
  - Three levels: low, medium, high
- Unclassified sources permit projection of general classes of missions
- Simplifications:
  - WTR launches not included but presumed to consume 40% of available launches; 70% of launched spacecraft mass
  - All ETR launches to high-energy orbits go to GEO

MILITARY MISSION MODEL BUDGETARY ASSUMPTIONS

The facing page presents the budgetary assumptions used in the military model. The low model assumes a cessation of historical growth in military space spending, the median model projects a continuation of historical trends and the high model presumes that space utilization increases with new classes of military missions.

SPACE OPERATIONS CENTER

NASA

SOC-1567

Military Mission Model Budgetary Assumptions

BOEING

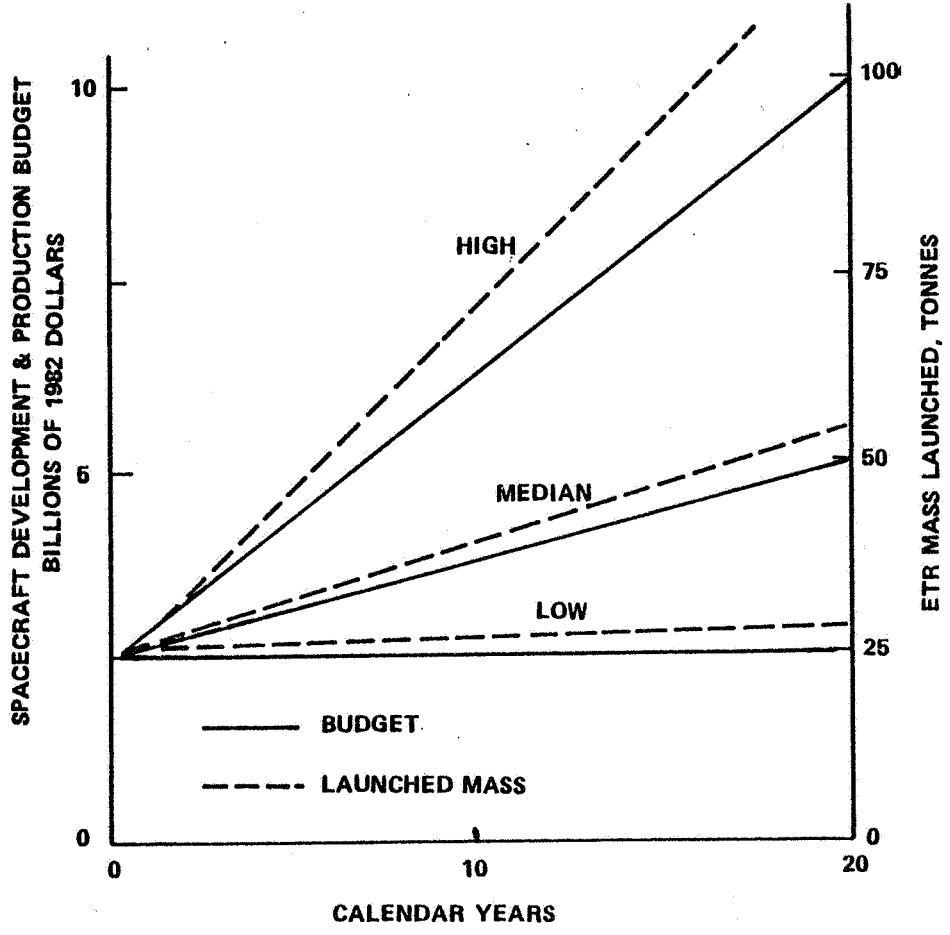

- LOW MODEL
  - NO SIGNIFICANT CHANGE IN USES OF SPACE
  - GRADUAL GROWTH OF AVERAGE SPACECRAFT MASS TO 5000KG BY END OF CENTURY
- MEDIAN MODEL
  - ASAT THREAT LEADS TO BUDGET GROWTH FOR SPACE DEFENSE
  - SPACECRAFT MASS GROWTH SAME AS LOW MODEL
  - MANNED ACTIVITY ONLY FOR SPACE TESTING AT A NATIONAL SPACE STATION
- HIGH MODEL
  - SPACE EVOLVES TO THEATER OF CONFLICT
  - SPACECRAFT AVERAGE MASS GROWTH TO 10,000 KG
  - SMALL MILITARY MANNED

HIGH LEVEL COST MODEL

In order to provide a payload projection, a high level cost model was used. The graph on the left-hand side of the facing page presents a high level spacecraft cost model in general use at Boeing for complex and simple spacecraft. The values plotted are the unit cost for the spacecraft in 1980 dollars. The figure on the right-hand side presents the same cost trends but in 1982dollars and in terms of thousands of dollars per kilogram. Both development and production costs are shown. Typical DOD programs utilize a number of units after the spacecraft is developed. Consequently, one can project a typical program aggregate based on a development cost and a production run of a number of spacecraft. This aggregate then represents the average cost per kilogram of spacecraft launched.

SPACE OPERATIONS CENTER

High-Level Cost Model

NASA SOC-1570 BOEING

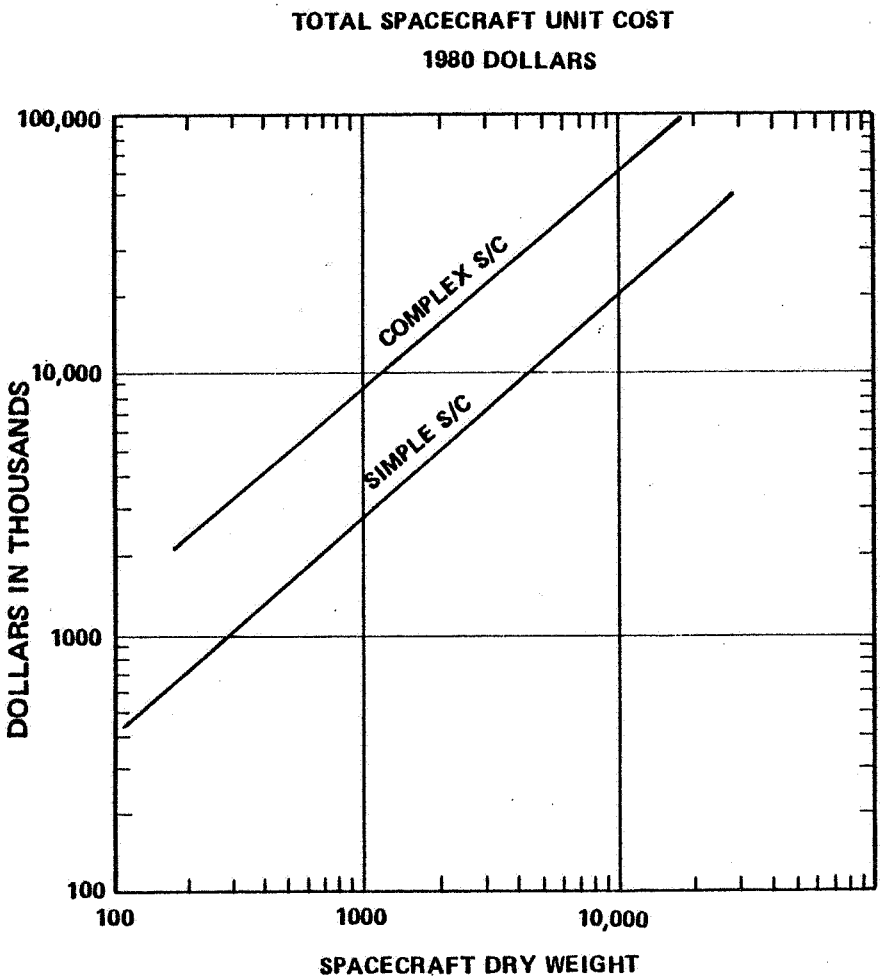

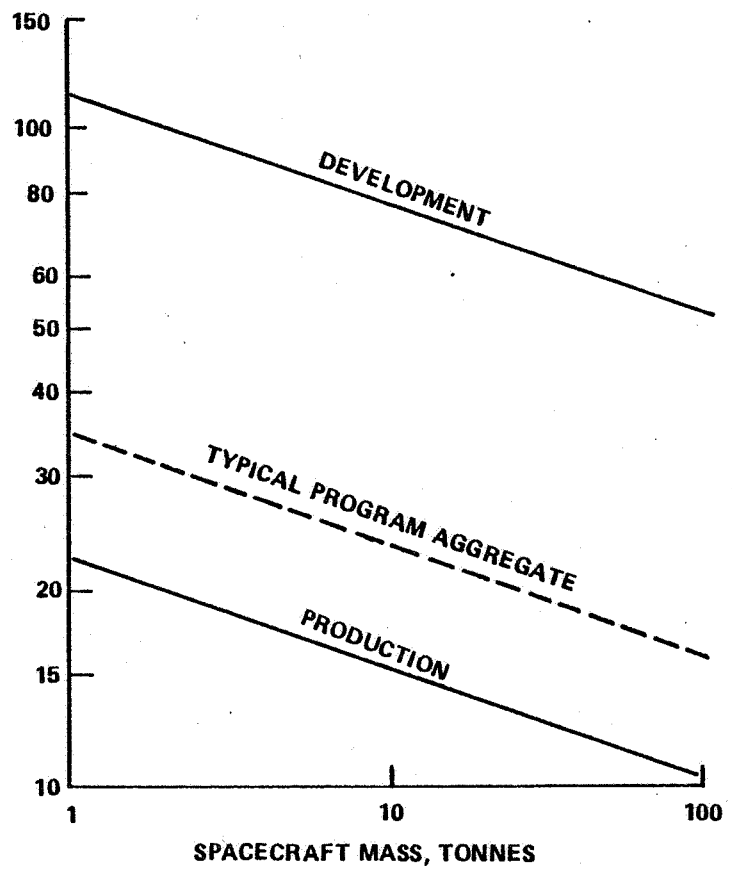

ASSUMED SPACECRAFT CHARACTERISTICS

A number of spacecraft were characterized using methods very similar to those for the communications satellites. A manned military station was assumed in the high model. This military station would be placed in a high energy orbit and would be resupplied using an orbit transfer vehicle and resupply module.

SPACE OPERATIONS CENTER

NASA

SOC-1459

Assumed Spacecraft Characteristics

BOEING

ASSUMED MILITARY SPACECRAFT	MASS KG	LENGTH, M (BASED ON 50 KG/M^2 AVERAGE DENSITY)	DIA, M	
1–TONNE CLASS	1000	2.8	3	COMPATIBLE WITH T-IV
2–TONNE CLASS	2000	5.6	3	COMPATIBLE WITH T-IV
3–TONNE CLASS	3000	4.77	4	
5–TONNE CLASS	5000	6.58	4.4	
10–TONNE/CLASS	10,000	13.16	4.4	
MANNED STATION	20,000	15	4.4	SINGLE SHUTTLE LAUNCH FOR DELIVERY TO LEO
MANNED STATION RESUPPLY	6000 UP 4000 DOWN	6	4.4	

MILITARY MISSION MODELS

The derived mission models for the three military model levels are presented on the facing page. These models do not include WTR launches nor do they include space testing at SOC as the latter was included in an earlier sector.

SPACE OPERATIONS CENTER

NASA

SOC-1539

Military Mission Models

BOEING

	CALENDAR YEAR											
LOW	89	90	91	92	93	94	95	96	97	98	99	200
1-TONNE CLASS	3	2	2	2	2	2						
2-TONNE CLASS	4	3	3	3	3	3	2	2	2	2	2	2
3-TONNE CLASS	3	3	3	3	3	3	3	3	3	3	3	3
MEDIAN												
1-TONNE CLASS	3	2	2	1	1							
2-TONNE CLASS	6	5	5	5	5	4	4	4	3	3	2	1
3-TONNE CLASS	6	5	5	4	4	5	3	3	2	2	2	3
5-TONNE CLASS		2	2	3	4	4	5	5	5	6	5	5
10-TONNE CLASS									1	1	2	2
HIGH												
1-TONNE CLASS	3	2	2	1	1							
2-TONNE CLASS	6	5	5	5	5	4	4	4	3	3	2	1
3-TONNE CLASS	6	5	5	4	4	5	3	3	2	2	2	3
5-TONNE CLASS		4	4	6	8	8	6	6	8	10	10	10
10-TONNE CLASS				1	1	1	2	2	2	3	4	4
MANNED STATION						1	1					
MANNED STATION RESUPPLY							2	4	4	4	4	4

NOTE: SPACE TESTING AT SOC NOT INCLUDED IN THESE PAYLOADS

SUMMARY OF THE MISSION MODELS
DELIVERY OR SERVICING EVENTS

The facing page compares the three mission models in terms of the flight delivery or servicing events per year. This chart illustrates the relative activity level of the three models and brings out the fact that the models are dominated by commercial and military mission applications.

SPACE OPERATIONS CENTER

Summary of the Mission Models : Delivery or Servicing Events

NASA

BOEING

SOC-1565

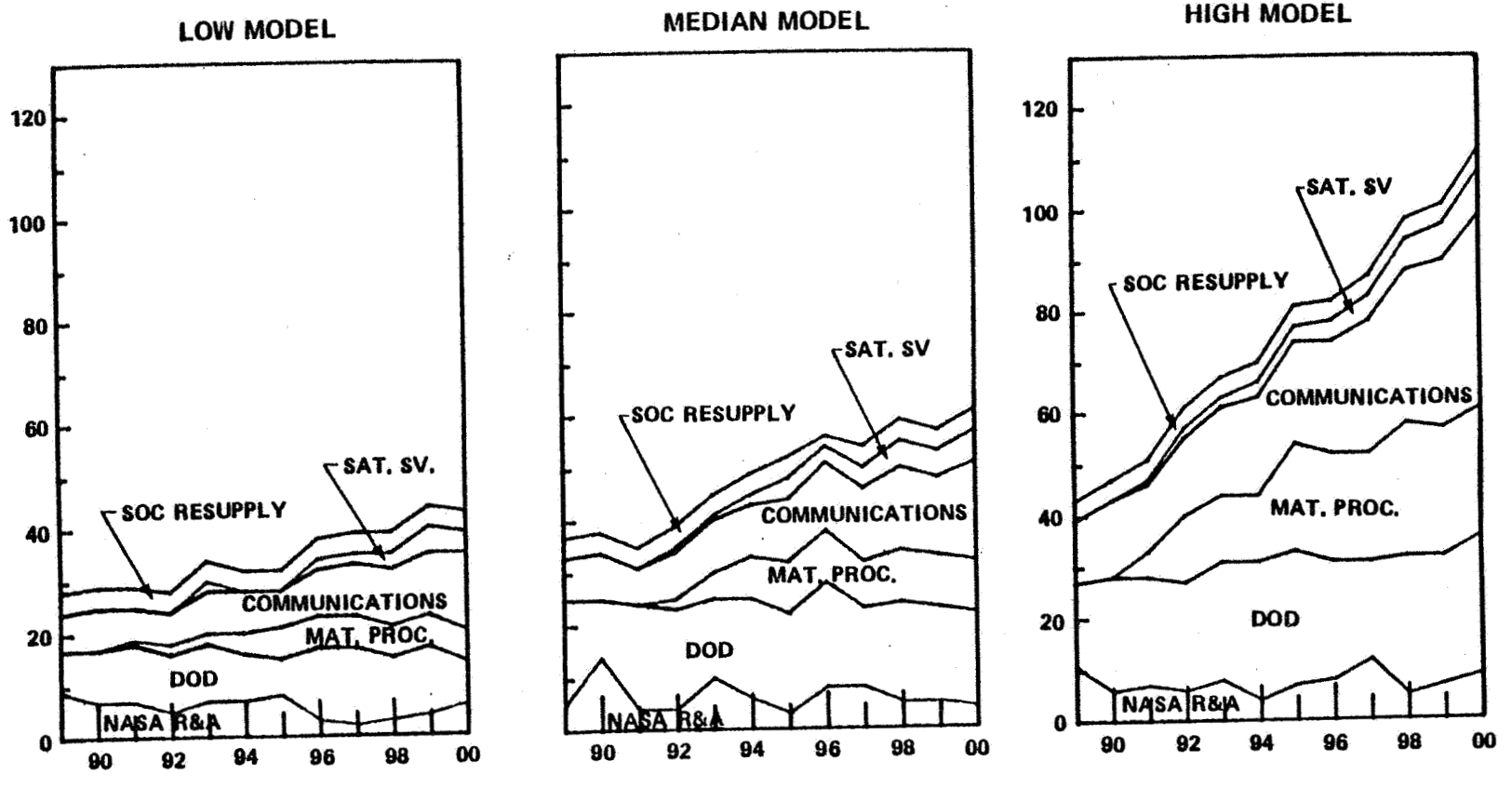

SOC UTILIZATION ANALYSIS

An SOC utilization analysis was conducted to determine the mission utility of SOC for the three mission models described.

SOC Utilization Analysis

SOC UTILIZATION ANALYSIS ELEMENTS

The mission models provide forecasts of mission events to be accomplished each year in a U.S. space program. Before the SOC operations analysis could be conducted, it was necessary to convert the mission models into traffic models. Since one of the functions of SOC is to serve as an element of space transportation systems, it is necessary to understand the space transportation requirements imposed by the mission models.

Traffic models were created by determining the space transportation traffic needed to accomplish each of the mission models. With the transportation traffic models created, the SOC operations analysis was then conducted to determine what SOC operations must take place, and what crew skills and man levels are required for a variety of mission models and transportation options.

SPACE OPERATIONS CENTER

NASA

SOC-1537

SOC Utilization Analysis Elements

BOEING

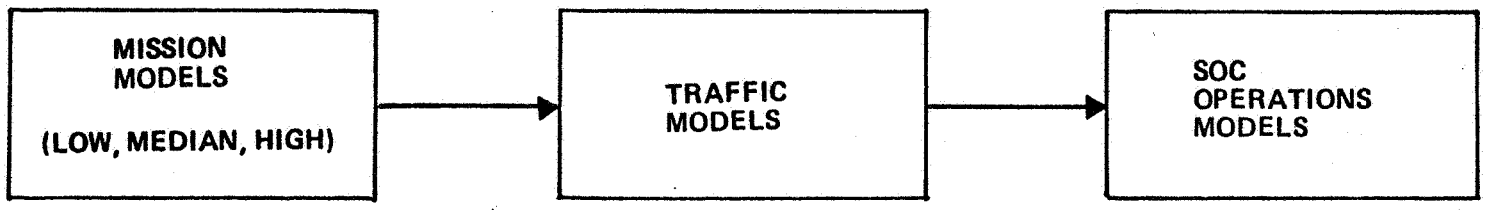

FORECASTS OF MISSION EVENTS TO BE ACCOMPLISHED EACH YEAR

DETERMINATION OF SPACE TRANSPORTATION FLIGHT TRAFFIC REQUIRED TO ACCOMPLISH A PARTICULAR MISSION MODEL, GIVEN ASSUMPTIONS OF SPACE TRANSPORTATION MODES AND CAPABILITIES

DETERMINATION OF SOC OPERATIONS, CREW SKILLS, AND MANNING LEVELS, GIVEN A PARTICULAR MISSION MODEL AND SET OF SPACE TRANSPORTATION MODES AND CAPABILITIES

AUTOMATED SOC UTILIZATION ANALYSIS SYSTEM

Because the analysis is quite tedious and highly repetitive, an automated system was created to conduct the SOC utilization analysis. This automated system consists of four modular software units that communicate through data files. The first software element is a file-handling code which reads a sequential mission description file and converts this file into random-access format files for the transportation manifesting analysis and for the crew activities and facility utilization analysis.

The second element of the program is a manifesting code which organizes the payload and traffic model data for actual manifesting analysis. This code creates mission traffic listings and also has the capability to generate plots of payload mass versus calendar time.

The actual manifesting analysis is done by the third element of this modular system. It reads the files created by the other elements and provides a manifesting results listing. It also provides a year-by-year file that is the principal input to the crew activities and facility utilization analysis.

The fourth element of the software system determines SOC crew activities and facility utilization, based on the transportation operations descriptions created by the manifesting analysis.

SPACE OPERATIONS CENTER

Automated SOC Utilization Analysis System

NASA

BOEING

SOC-1452

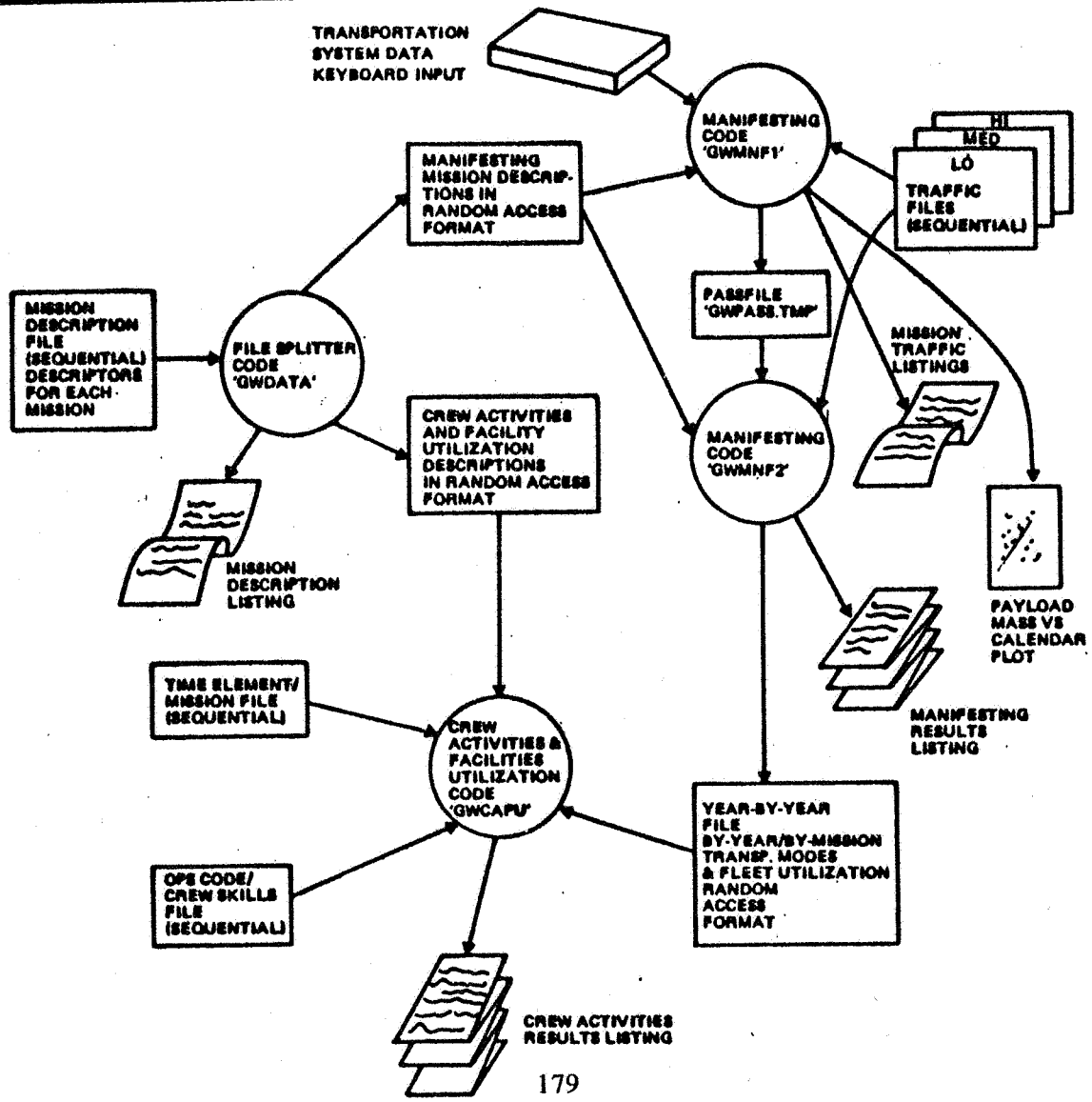

SAMPLE OF PAYLOADS DATA

The facing page presents a sample of the payloads data used by these programs. This sample includes only payloads delivered to SOC as indicated by the delta v's being zeroes.

Research and applications man-level information is also listed in this file, and is flagged so that the transportation manifesting code recognizes this as a man-level pass-through to the crew activities code. No manifesting is conducted for these mission elements.

SPACE OPERATIONS CENTER

NASA

SOC-1456

Payloads Data Sheet One

BOEING

NO.	CODE	NAME	ORBIT ALT	ORBIT INCL	DELTA V'S UP	DELTA V'S DOWN	DELTA V'S A/B	MASSES SUPT	MASSES PAYLD	MASSES RET	LENGTHS SUPT	LENGTHS PAYLD	PAYLD DIA	MANIF RESTR
1	MP01	DEL SHORT EXP MODULE	370	28.5	0	0	0	0	5568	5568	0.00	4.27	4.06	0
2	MP02	DEL FULL EXP MOD	370	28.5	0	0	0	0	8431	8431	0.00	6.97	4.06	0
3	MP03	DEL EXP PALLET	370	28.5	0	0	0	0	1437	1437	0.00	2.88	4.49	0
4	MP04	MPEXP MANLEVEL	0	0.0	0	0	0	0	0	0	0.00	0.00	0.00	0
5	MP05	DEL PROC DEV MOD	320	28.8	0	0	0	0	8431	8431	0.00	6.97	4.06	0
6	MP06	MPDEV MANLEVEL	0	0.0	0	0	0	0	0	0	0.00	0.00	0.00	0
7	MP07	RESUPPLY PROD	0	0.0	0	0	0	0	3000	0	0.00	0.00	4.00	0
8	MP08	MPPROD MANLEVEL	0	0.0	0	0	0	0	0	0	0.00	0.00	0.00	0
9	MP09	DEL PRODUC SC	370	28.5	0	0	0	0	10000	0	0.00	12.00	4.49	0

SAMPLE PAYLOADS DESCRIPTION
SHEET 2

In addition to the payloads physical data, a variety of time information is provided in order to ascertain crew activities required for such missions as satellite servicing and space construction.

SPACE OPERATIONS CENTER

NASA

SOC-1456

Payloads Data Sheet Two

BOEING

OPS CODE	********** TIMES ********** UP/ DN	ON ORB	MAINT DELTA	REP- AIR	RE- FURB	RE- SUPP	EXP- ERMT	LENGTH BEAM FAB	NO OF APP	NO OF MODULES
MP	2.00	2.00	0.00	0.00	0.00	0.00	0.00	0	0	1
MP	0.00	0.00	0.00	0.00	0.00	0.00	0.00	0	0	0
MP	0.00	0.00	0.00	0.00	0.00	0.00	0.00	0	0	0
MPO	0.00	0.00	0.00	0.00	0.00	0.00	0.00	0	0	0
MPP	0.00	0.00	0.00	0.00	0.00	0.00	0.00	0	0	0
MPO	0.00	0.00	0.00	0.00	0.00	0.00	0.00	0	0	0
SIS	0.00	0.00	0.00	0.00	0.00	0.50	0.00	0	0	0
MPO	0.00	0.00	0.00	0.00	0.00	0.00	0.00	0	0	0
MPP	0.00	0.00	0.00	0.00	0.00	0.00	0.00	0	0	0

MISSION MODEL SAMPLE

The mission model also includes mission traffic information. Illustrated on the facing page is a sample of such information for the flight support part of the mission model. This segment of flight support information is for the low traffic model. As can be seen by the numbers on the left, many of the payloads have been skipped for this low traffic model. Also the man-level missions are not counted as flight support missions.

SPACE OPERATIONS CENTER

NASA

SOC-1454

Mission Model Sample

BOEING

NO.	KEY	PAYLOAD DESCRIPTION	TRAFFIC MODEL YEAR 89	90	91	92	93	94	95	96	97	98	99	00
1	MP01	DEL SHORT EXP MODULE				1	1	1	1	1	1	1	1	1
3	MP03	DEL EXP PALLET			1	1	1	1	1	1	1	1	1	1
5	MP05	DEL PROC DEV MOD						2	4	4	4	4	4	4
10	LS01	DEL LS RSH MOD								1				
15	DO01	DEL DOD SMPALLET		1		1		1		1		1		1
16	DO02	DEL DOD LGPALLET	1		1		1		1		1		1	
18	DO04	DEL 1-TON SPACFT	3	2	2	2	2	2						
19	DO05	DEL 2-TON SPACFT	4	3	3	3	3	3	2	2	2	2	2	2
20	DO06	DEL 3-TON SPACFT	3	3	3	3	3	3	3	3	3	3	3	3
21	DO07	DEL 5-TON SPACFT		1	2	2	2	2	3	3	3	3	3	3

MANIFESTING LOGIC GENERAL FLOW

The manifesting code analyzes each traffic model year-by-year and mission-by-mission. At user option, either ground-or space-basing of the OTV can be selected. In either case, the first step is to select an appropriate OTV mode if an OTV is required. For the ground-based logic, if a payload and OTV cannot be integrated on a single shuttle flight the payloads and OTVs are loaded into a holding array. Payloads not requiring an OTV are loaded into the same array. For the space-based option the OTV modes are selected, following which all payloads are loaded into the holding array.

These steps complete the missions loop. At this point a transition is made from analyzing the model mission-by-mission to analyzing it shuttle-flight-by-shuttle-flight. A payload grouping logic manifests shuttle flights using all the payloads in the holding arrays. In addition, for the ground-based case, payloads that can be manifested with their own OTV are also manifested on shuttles. In the space-based case it is then necessary to manifest tanker flights in order to bring up enough propellant to accomplish the year's missions. This completes the flights loop. When all of the years of the traffic model have been completed, then the manifesting code prints the manifesting analysis results and generates the files required for the crew activities analysis.

SPACE OPERATIONS CENTER

NASA

SOC-1541

Manifesting Logic General Flow

BOEING

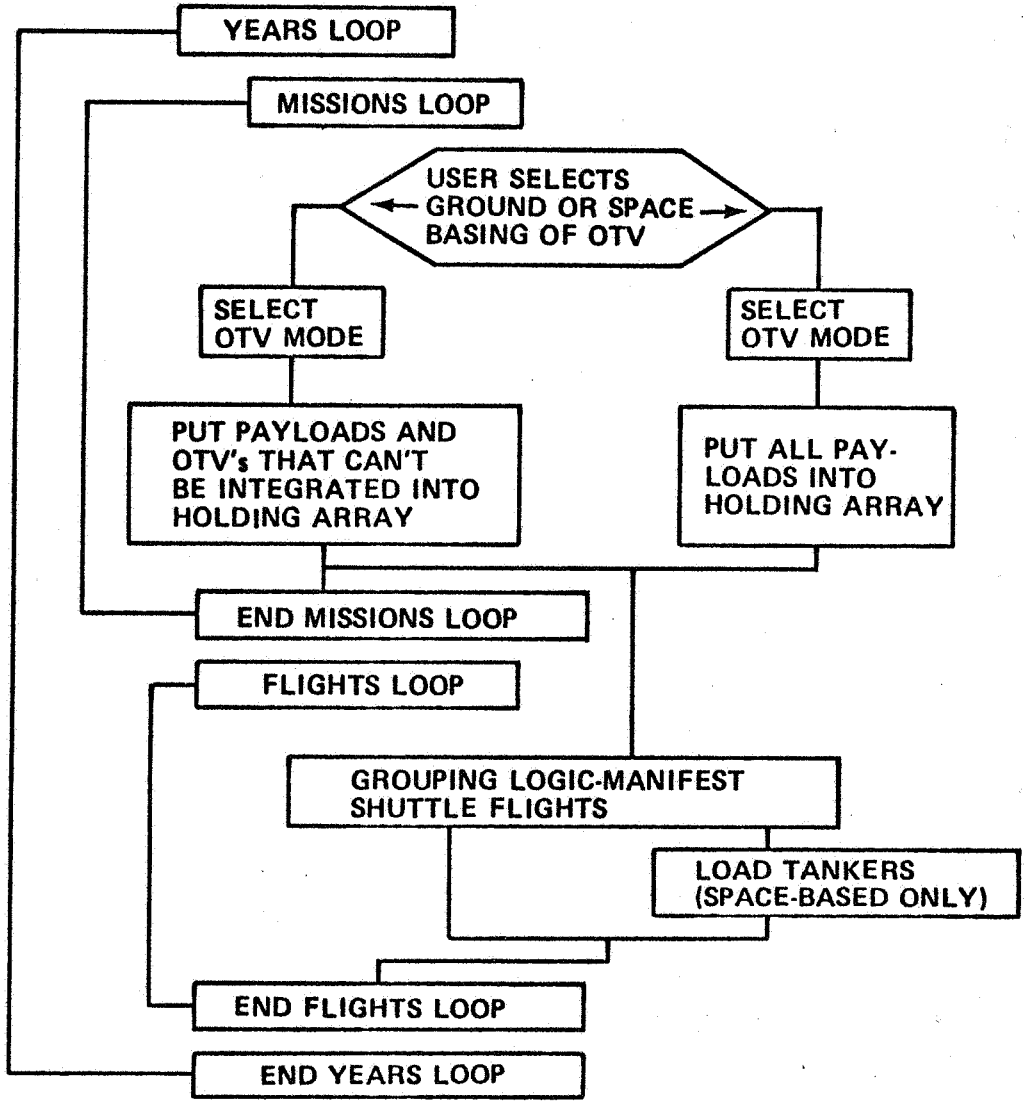

OTV MODE SELECTION

The manifesting logic selects from among nine ground-based OTV modes or five space-based modes. The mode for each mission is selected to provide the least cost, considering shuttle and OTV costs. In the event a mission cannot be accomplished by the most capable OTV mode available, the software flags the mission as not achievable, but it charges the space transportation system with the most difficult applicable mode so that faulty comparisons do not arise from not manifesting missions in one case that are manifested in another.

Aerobraking operations are simulated by adjusting the delta v and the inert weight of the OTV to represent the delta v savings of the aerobraking pass and the increased inert weight of the aerobraking equipment.

SPACE OPERATIONS CENTER

NASA

SOC-1453

OTV Mode Selection

BOEING

GROUND-BASED MODES

1 – SINGLE-STAGE, MATCHED WITH PAYLOAD & REUSED

2 – SINGLE-STAGE, MATCHED WITH PAYLOAD & EXPENDED

3 – SINGLE-STAGE, NOT MATCHED WITH PAYLOAD BUT REUSED

4 – SINGLE-STAGE, NOT MATCHED WITH PAYLOAD, EXPENDED

5 – TANDEM-STAGE, UPPER MATCHED WITH PAYLOAD, ALL REUSED

6 – TANDEM-STAGE, UPPER MATCHED WITH PAYLOAD, UPPER EXPENDED

7 – TANDEM-STAGE, NOT MATCHED WITH PAYLOAD, ALL REUSED

8 – TANDEM-STAGE, NOT MATCHED WITH PAYLOAD, UPPER EXPENDED

9 – CAN'T DO MISSION

SPACE-BASED MODES

1 – SINGLE-STAGE, REUSED

2 – SINGLE-STAGE, EXPENDED

3 – TANDEM-STAGE, REUSED

4 – TANDEM-STAGE, UPPER EXPENDED

5 – CAN'T DO MISSION

- AEROBRAKING SIMULATED BY ADJUSTING DELTA V AND INERT WEIGHT
- SELECT LEAST-COST MODE THAT CAN DO MISSION, CONSIDERING SHUTTLE AND OTV COST

SPACE SHUTTLE MANIFESTING OPTIONS

On the left is shown the ground-based OTV manifesting logic. Whenever possible, a payload is manifested with its own OTV in a shuttle flight. In such an instance, SOC operations are not required unless the payload requires some sort of servicing from a SOC (such as construction). If necessary, the OTVs and payloads are manifested separately, in which case these OTVs and payloads go through the grouping logic to improve transportation manifesting whenever possible.

The center diagram shows the space-based manifesting logic that was used in the earlier part of the SOC study. This logic loaded all payloads into the holding array, manifested payloads together whenever possible, and then completed the year's flights by loading enough tankers to provide the propellant required for the year's missions. This manifesting mode turned out to be relatively inefficient inasmuch as the manifesting of payloads together ordinarily resulted in volume-limited rather than mass-limited flights.

On the right hand we show an improved space-based manifesting logic. Shuttle center of gravity constraints will allow approximately 20,000 pounds of payload to be loaded in the front of the shuttle payload bay if a reduced-capacity tanker is placed in the back of the payload bay. Approximately the same payload is allowable whether the tanker is full or empty. Accordingly, a short tanker was designed with a propellant capacity of about 40,000 pounds. The manifesting logic manifests as many payloads with this short tanker as can be so manifested within the payload bay length and mass limits available. Those payloads that cannot be so manifested are then grouped together for additional shuttle flights. Finally, any full-capacity tankers that may be necessary to bring up the balance of propellant required are manifested.

In either of the space-based cases, propellant scavenging from the ET reduces the number of shuttle flights by about 10%. Propellant scavenging can be used to increase the mass loading of either the short tanker or the full tanker. In addition, when payloads manifested together have space available in the back of the payload bay for a small catch tank set, additional propellant can be brought up on payload flights.

SPACE OPERATIONS CENTER

Space Shuttle Manifesting Options

NASA — BOEING

SOC-1572

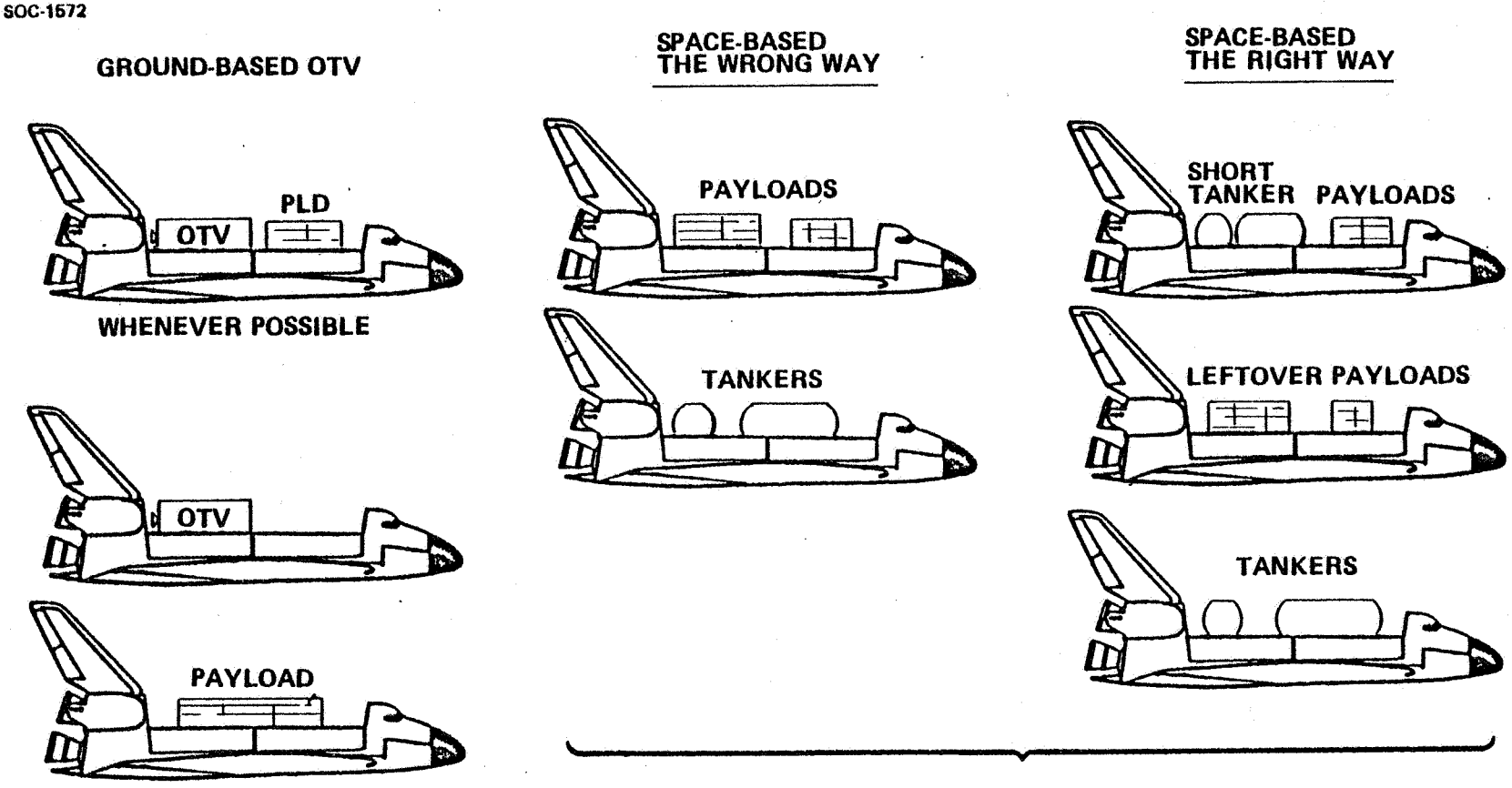

IN EITHER INSTANCE, PROPELLANT SCAVENGING FROM ET REDUCES NUMBER OF SHUTTLE FLIGHTS BY ABOUT 10%

80

COMPARISON OF OTV OPERATING MODES

Five OTV operating modes were analyzed in this study. These are compared on the facing page. The results presented are for the median mission model, for ETR launches only.

A space transportation cost indicator was used, this being the number of shuttle flights required plus the number of OTVs expended. Although neither the cost of an OTV nor the cost of a shuttle flight are accurately known, it is presently thought that these costs are roughly comparable.

The comparison shows that the greatest leverage in reducing space transportation costs arises from the use of aerobraking in either the ground- or space-based case. The comparison also shows that space-basing offers an advantage of about 10% over ground-basing in the aerobraking case. Finally, the addition of ET scavenging adds about another 10%. The difference between the least effective OTV mode, ground-based or propulsive, and the most effective mode represents approximately a 40% reduction in the number of shuttle flights required to accomplish the median traffic model.

SPACE OPERATIONS CENTER

NASA

SOC-1544

Comparison of OTV Operating Modes

Median Mission Model

ETR Only

BOEING

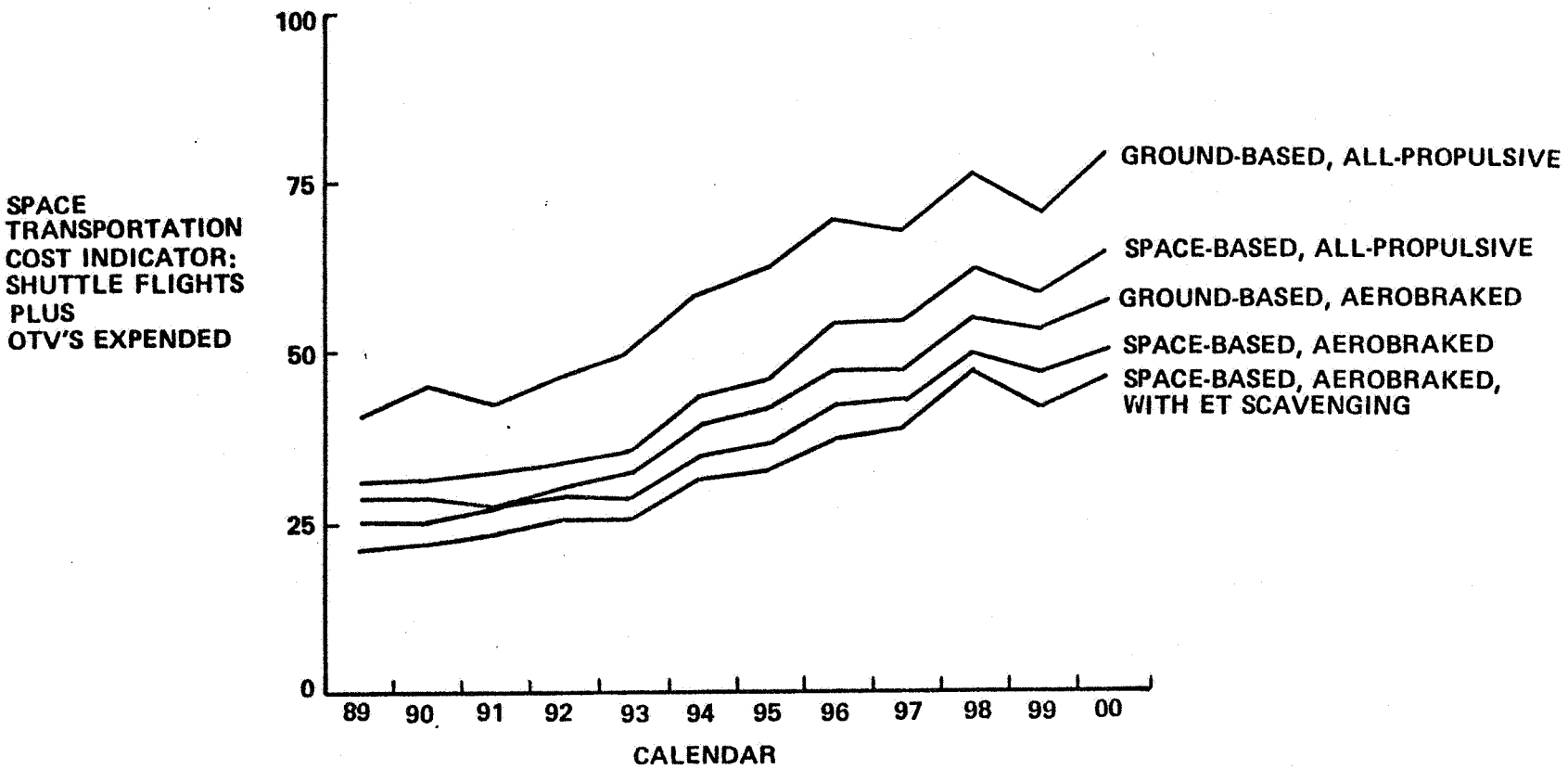

TOTAL SPACE TRANSPORTATION DEMAND FORECAST

The automated analysis did not process WTR launched payloads inasmuch as it is presently not expected that these would be involved in SOC operations. To complete the picture for the space transportation analysis, the WTR launches were included in a total space transportation demand forecast. The demand forecast for the three models is presented on the facing page. This forecast assumes that space-based aerobraked OTVs are employed and that ET scavenging is implemented.

The total demand forecast for the low and median models is quite similar because the space transportation systems are used somewhat more effectively in the median models. There are more opportunities for payload grouping; on the average, the payloads are somewhat larger. The high model reflects a rapid growth in space transportation demand approaching 100 shuttle flights per year by the year 2000.

The high model represents a scenario in which extensive commercial investments in space activities would occur along with a significant level of military operations. An assumption consistent with the high model scenario is one that would presume a development of a second generation space transportation system by the middle 1990s.

SPACE OPERATIONS CENTER

NASA

SOC-1543

Total Space Transportation Demand Forecast
(Aerobraked OTV)

BOEING

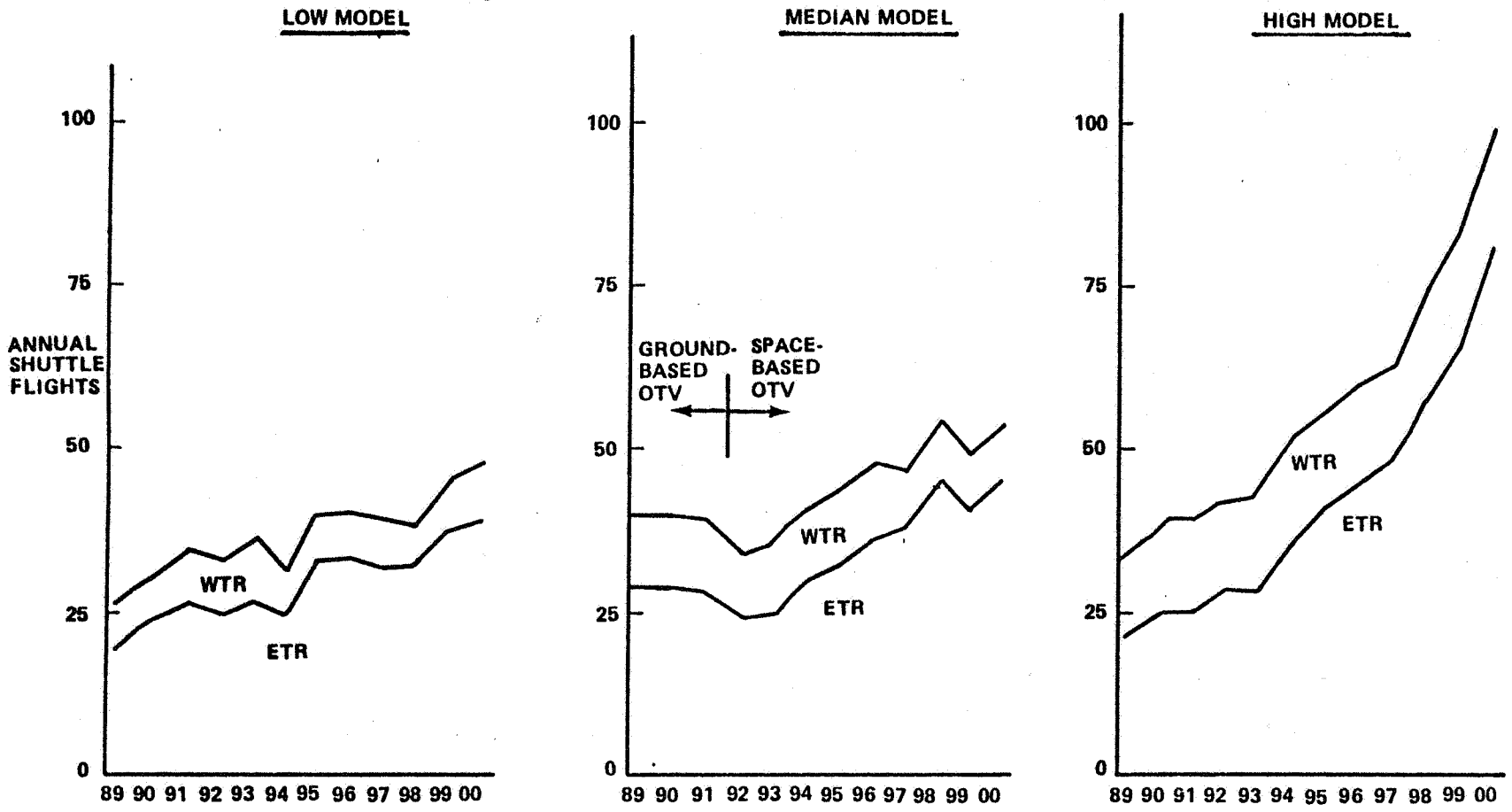

NOTE: THIS DEMAND FORECAST ASSUMES:

1) TRANSITION TO SPACE-BASED OTV IN 1992
2) ALL OTV's ARE AEROBRAKED
3) ET SCAVENGING IS IMPLEMENTED FOR SPACE-BASING

CREW ACTIVITIES ANALYSIS OVERALL LOGIC

The crew activities analysis operated on the results of the manifesting analysis and employed additional input data as noted on the earlier chart. The crew activities analysis operates on a year-by-year basis and examines each shuttle flight as manifested in sequence.

The chart illustrates the shuttle functions analysis in more detail than the other functions. Since a shuttle may carry two payloads in addition to a tanker, the shuttle functions for the first payload are identified. Those functions required are marked by setting flags. Then these functions are manloaded using a function versus skill matrix. Secondly, the shuttle functions required for the second payload are then identified. A flag flip-flop routine is used to avoid double counting of shuttle functions. In other words, if an orbiter arrival operation is required for the first payload, the flag flip-flop prevents that arrival operation from being counted again for the second payload. The functions for the second payload are then manloaded using the functions skills matrix. In a similar manner, OTV functions, construction functions, satellite servicing functions and onboard science and applications functions are analyzed. These are then summed up and printed for each flight. Following the analysis of all the flights in each year, they are summed up and printed for the year.

SPACE OPERATIONS CENTER

NASA

SOC-1542

Crew Activities Analysis Overall Logic

BOEING

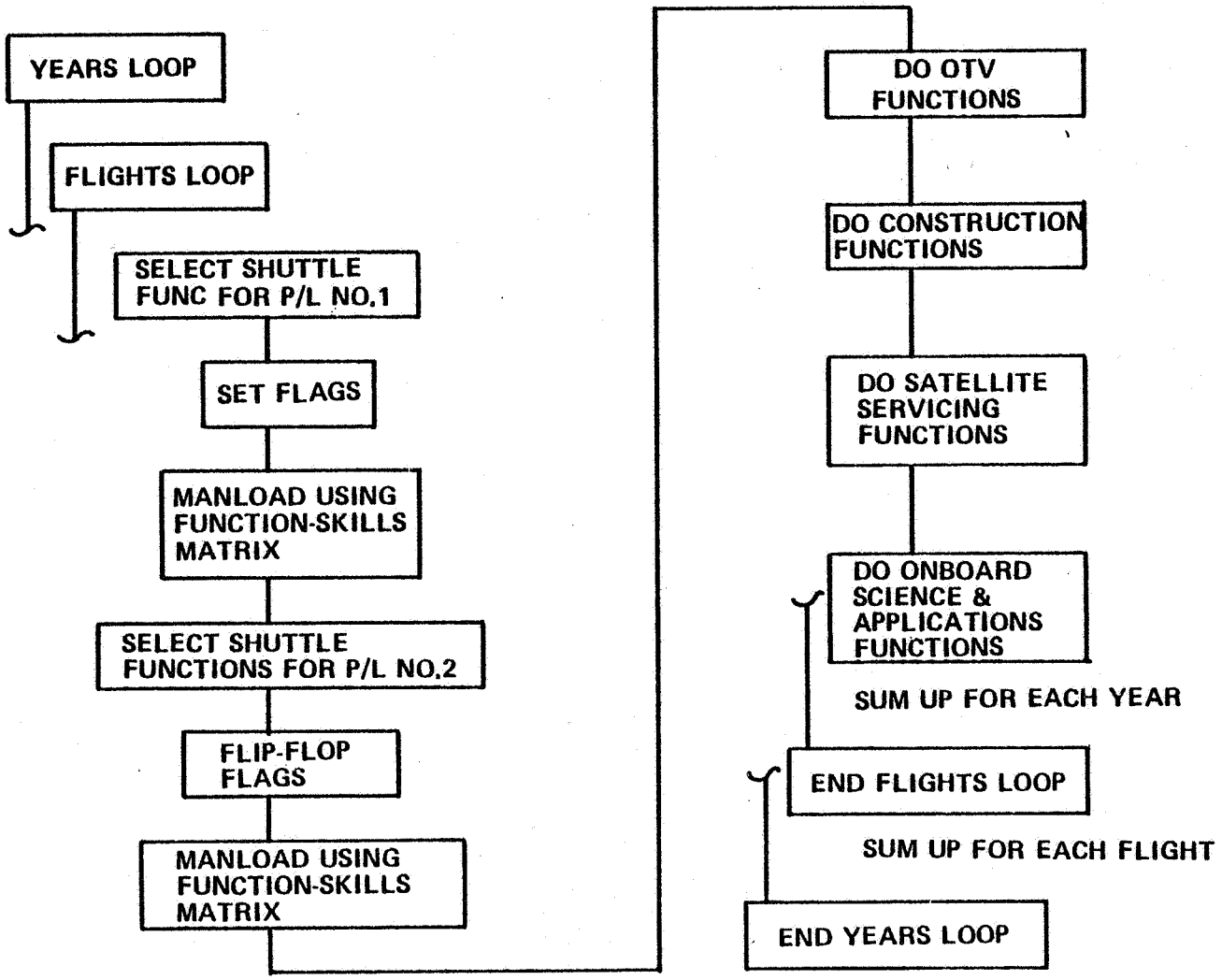

SHUTTLE/SOC CREW SKILLS MATRIX

This is an example of the crew skills matrix used to compute SOC crew skills requirements and manloading requirements. On the left-hand side are indicated five orbiter functions that may occur for any particular payload delivery. The analysis logic selects those functions that are applicable to a particular flight. The time estimates in the second column represent the number of days required to accomplish a particular function. These represent days of continuous work. An orbiter offloading activity is estimated to require 6/10ths of a day, representing 14.4 hours of continuous manned operations. As indicated in the body of the matrix, three skills would be required full time during this 14.4 hours of activity for shuttle offloading.

Continuous hours of work are adjusted for actual shift operations and days off to determine calendar time required to accomplish a particular set of functions for a particular mission.

Similar matrices were used for the OTV construction and satellite servicing functions. A slightly different mechanism was used to estimate the required science and applications functions inasmuch as the research manlevels were passed through from the traffic model.

SHUTTLE/SOC CREW SKILLS MATRIX

97

NO.	ITEM	TIME	IVA OPERATOR	EVA C/P OPERATOR	EVA WORKER	TEST & C/O ENGR	ELEC/MECH ENGR	PROP/FLUIDS SPCLST	FLT CONTR/SYS ENGR	PILOT	MATLS SPCLST	VISITING RESEARCHER	LIFE SCI SPCLST/DR	GENERAL
1	ORBITER ARRIVE	0.0416	100						50					
2	ORBITER OFFLOAD	0.60	100	100	100									
3	ORBITER RELOAD	0.60	100	100	100									
4	ORBITER DEPART	0.021	100						100					
5	ORBITER PROP. X-ER	.5417	100				25	100						
	ORBITER WAIT													
	RESERVED													
	RESERVED													

OTV BASING SPACE VERSUS GROUND

Consideration of whether to base OTVs in space or on the ground requires evaluation of the SOC requirements as well as evaluation of the transportation requirements. Shown on the left of this chart are the annual shuttle flights plus OTVs expended for three cases, all with aerobraking of the OTV. Space-basing saves on the average about four shuttle flights per year. However, it requires on the average about three-and-a-half extra SOC crew.

Based on a cost estimate for SOC crew labor, to be described elsewhere in this briefing, the costs of space-basing for the crew labor are approximately 1.67 billion over a 12-year mission model, and the savings are somewhat greater, approximately 2 billion over the same period based on a $40 million average shuttle flight cost.

SPACE OPERATIONS CENTER

NASA

SOC-1515

OTV Basing: Space vs Ground

(Median Traffic Model)

BOEING

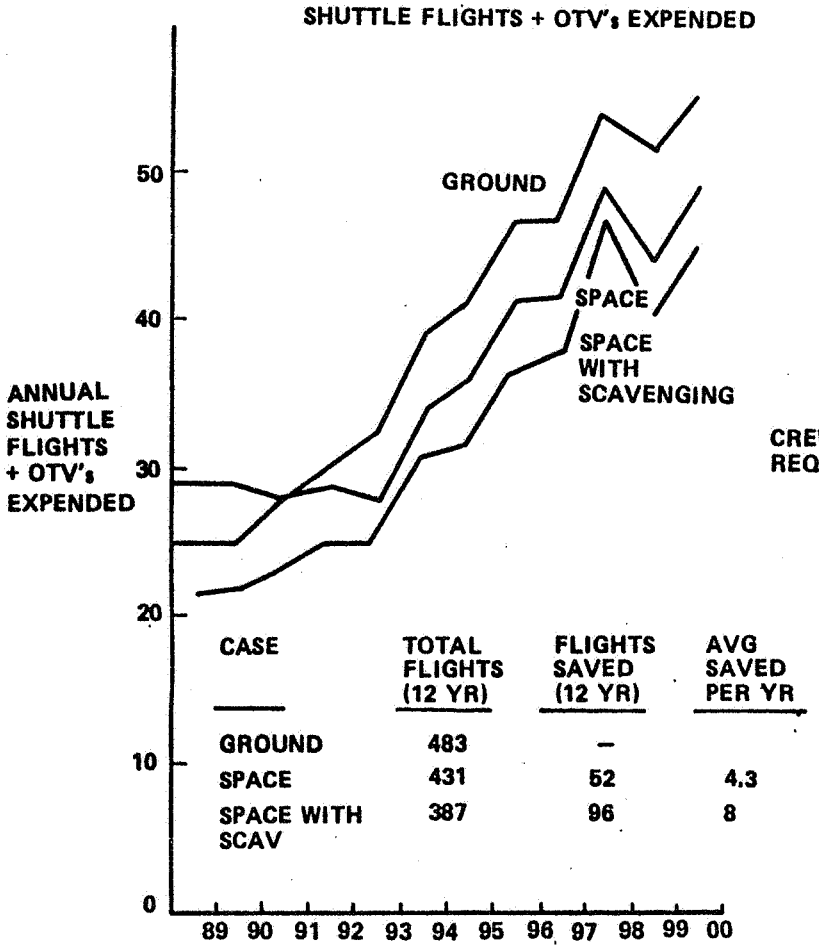

CASE	TOTAL FLIGHTS (12 YR)	FLIGHTS SAVED (12 YR)	AVG SAVED PER YR
GROUND	483	–	
SPACE	431	52	4.3
SPACE WITH SCAV	387	96	8

SPACE-BASING SAVES 52 @ $40M = $2.081B

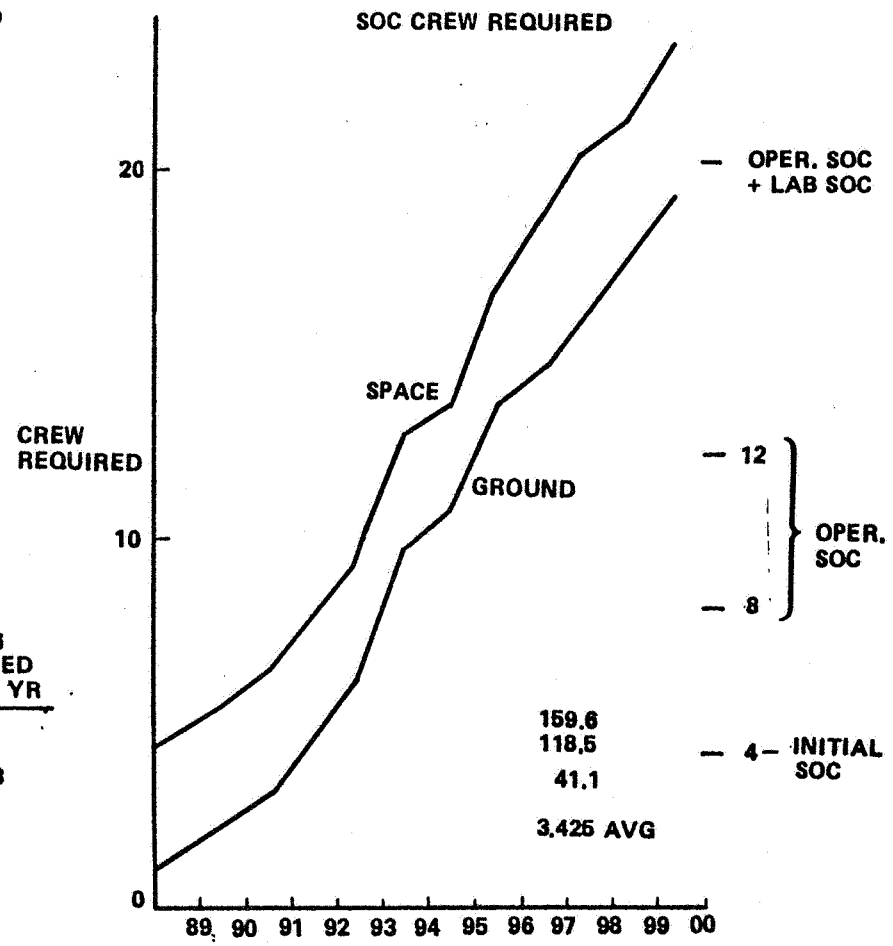

SPACE-BASING COSTS:
3.425 AVG EXTRA CREW X 12 YR X 312 WORK-DAYS/YR
X $130K/MANDAY = $1.67B

SOC MISSION ANALYSIS CONCLUSIONS

Several conclusions were drawn from this analysis. First, the mission model is dominated by the commercial and defense sectors. This is an expected result inasmuch as these sectors represent important national priorities.

We found a definite need for Space Operations Center. A manned space station pays off both for operations and for research and applications. In fact, the SOC utility divides roughly evenly between the operations functions and on-board science and applications.

The science and applications activities in this mission model were confined to those that have significance to either long-term manned space operations or potential commercial applications.

Because we project an increase in the SOC crew requirements with time, an evolutionary program is the best fit to mission needs. It would be logical to begin SOC operations with a ground-based OTV for the first two or three years. The SOC crew will initially be largely occupied with smoothing out station operations. Further, it would be most practical to ground-base the OTV until some operating experience with the vehicle is obtained. It appears logical to begin with a four-man SOC and eventually grow to 8 to 12 people. Towards the end of the 1990s, it may be desirable to set up a separate station for research and application missions.

We found that OTV aerobraking is essential to reduce the demands on space transportation. It does not appear to make sense to develop an OTV without aerobraking. Finally, space-basing pays off as does ET external tank scavenging. It appears that the OTV should be designed for space-basing even though it will probably be initially operated in a ground-based mode.

The low and median mission models developed by this study represent moderate demands on space transportation. They do not appear to exceed the capabilities of a five-orbiter fleet even by the year 2000, assuming that all five orbiters are in the turnaround cycle. Only the high model exceeds this demand level. The high model represents an economic scenario in which commercial investment in space transportation fleet equipment could probably provide the additional capacity.

SPACE OPERATIONS CENTER

NASA

SOC-1458

SOC Mission Analysis Conclusions

BOEING

- Mission model is dominated by commercial and defense sectors
- Definite need for SOC - it pays off
- SOC utility divides roughly evenly between operations and onboard science and applications
- Evolutionary program best fit to mission needs
- OTV aerobraking is essential to reduce demands on space transportation
- OTV space basing pays off - so does ET scavenging
- With SOC and advanced OTV technology, only the high model exceeds the capacity of a 5-orbiter fleet by the year 2000.

Orbital Operations Analysis

SOC ORBITAL OPERATIONS

The SOC orbital operations analysis had three objectives:

Objective 1—Analyze the capability of the SOC to support multiple, simultaneous operations such as space construction, satellite servicing, test, and checkout, flight support for Orbital Transfer Vehicles and operations with the Shuttle.

Objective 2—Identify special requirements and impacts. Determine hardware and software, communications, and data management requirements considering ground, onboard (internal to SOC), and the above delineated operations.

Objective 3—Assess the capability of the SOC to conduct the simulations operations required by the range of defined mission models.

To accomplish these objectives, we have focused attention on the Low, Medium, and High Mission Models developed for the space-based, aerobraked OTV.

The three mission models were examined to define the following operational characteristics:

- Over a 12-Year ('989-2000) Period
  - Relative amounts of time spent conducting flight support, construction, satellite servicing, and science and applications mission operations.
  - Relative number of vehicle (Orbiter Teleoperator d OTV) operations.
  - Facility, vehicle, and mission module requirements.
  - SOC configuration/subsystem limitations and recommended workarounds.
- For Year 1993
  - Mission operations timeline

SPACE OPERATIONS CENTER

NASA

SOC-1493

Orbital Operations Analysis

BOEING

- Objectives
  - Analyze capability of SOC to perform simultaneous missions
  - Define facility and equipment requirements
  - Analyze range of mission models
- Approach
  - Analyzed low, medium, and high mission models (SBOTV/AB)
  - 12-year time span (1989-2000)
  - Analysis defined.
    - –Relative amount of time spent conducting flight support, construction, satellite servicing, research
    - –Vehicle traffic
    - –Facilities, vehicles, modules required each year
    - –SOC limitations and workarounds
  - Focused on year 1993
    - –Mission operations timeline

820063-004

LOW MISSION MODEL OPERATIONS ANALYSIS

Payload Time On-Board SOC

The relative amounts of time spent handling the various types of missions (flight support, construction, etc.) is illustrated in the facing figure.

During the 1989-1991 time period the total time on-board is high because a one shift operation is in effect. From 1992 on, the time on-board drops down when two-shift operations are involved.

It is seen that during the first four years (1989-1993) the flight support and construction missions dominate. From 1993 and on the science and applications missions are of the same magnitude as the flight support and construction operations. The satellite servicing operations are intermittently required (1992) and when they begin to show a sustained activity level, their workload is an order of magnitude less than the other operations.

SPACE OPERATIONS CENTER

NASA

SOC-1506

Time Payloads Are on Board SOC– Low Mission Model (SBOTV/AB)

BOEING

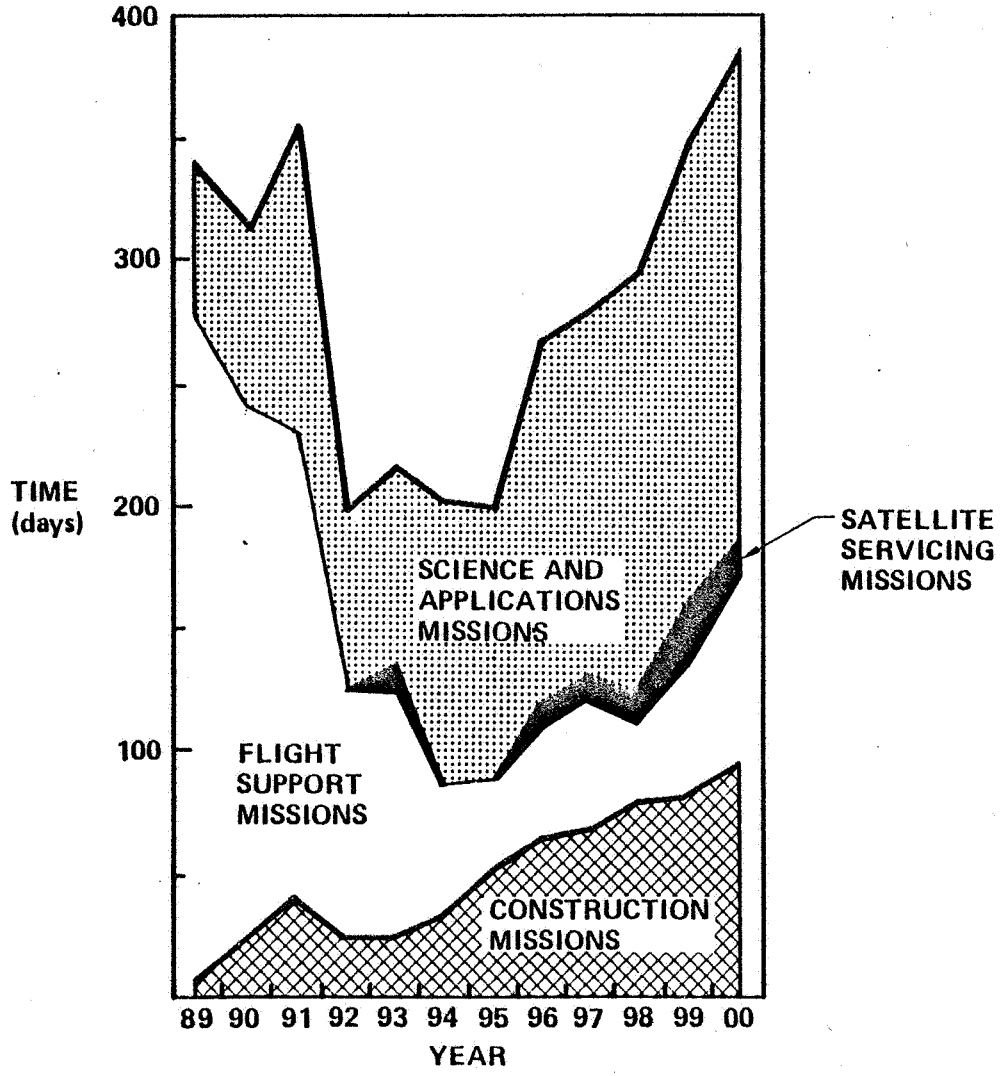

820063-019

VEHICLE OPERATIONS

The number of OTV, Teleoperator, Shuttle, and MOTV flights per year are plotted in the facing chart.

Vehicle Operations at SOC for Low Mission Model (SBOTV/AB)

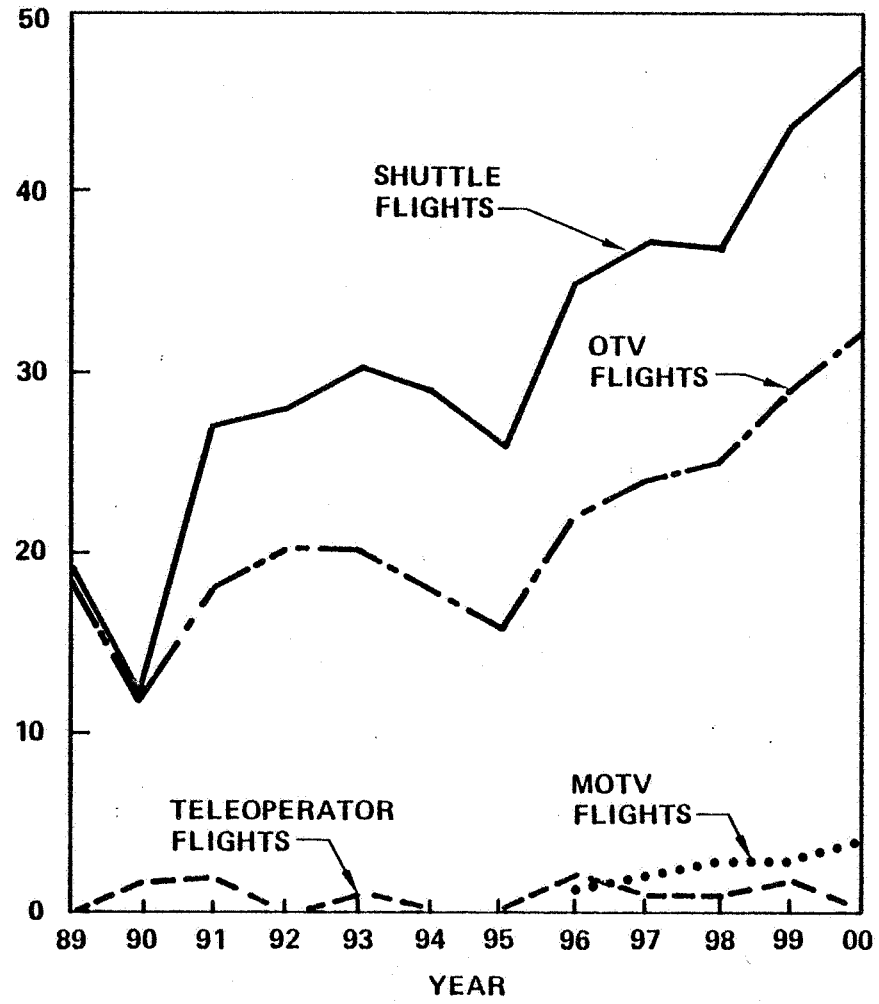

820063-016

FACILITIES/VEHICLES/MISSION MODULES/CREW SIZE REQUIREMENTS

The mission model has been carefully examined to define the number of SOC modules, the number of vehicles, the number of mission modules, the number of berthing ports required/available, and the crew size required during any year of the 12-year time period, see facing chart.

The implications that can be derived from inspection of this figure are the following:

1. The use of the aerobraked space-based OTVs from the beginning of the model requires that the "Initial SOC" be equipped with a hangar, a flight support pier, and a propellant storage tank.

2. The second Service Module (SM-2) is not required until 1992 when the number of berthing ports available on SM-1 for attached mission modules is exceeded and the crew size exceeds five, thus requiring another Habitat Module.

3. The first medium complexity mission in 1990 will require the construction pier and storage facility to be added then.

4. A second hangar and propellant tank are required in 1992 to accommodate the second OTV.

5. When the MOTV Crew Module is added in 1996, another hangar must be provided.

6. A Mini-Habitat Module is added in 1996 to accommodate the crew size in excess of eight people.

SPACE OPERATIONS CENTER

Facilities, Vehicles, and Missile Module Requirements for Low Mission Model (SBOTV/AB)

NASA

BOEING

SOC-1480

FACILITIES, VEHICLES, MODULES	89	90	91	92	93	94	95	96	97	98	99	00
SOC FACILITIES AND MODULES												
• SERVICE MODULE 1												
• SERVICE MODULE 2												
• HABITAT MODULE 1												
• HABITAT MODULE 2												
• MINIHABITAT MODULE												
• DOCKING TUNNEL												
• HANGAR												
• PROPELLANT STORAGE TANK												
• FLIGHT SUPPORT FACILITY PIER												
• CONSTRUCTION PIER												
• STORAGE FACILITY												
VEHICLES												
• OTV												
• TELEOPERATOR												
• CREW MODULE												
MISSION MODULES AND PALLETS												
• LIFE SCIENCES RESEARCH MODULES AND PALLETS												
• MATERIALS PROCESSING RESEARCH MODULES AND PALLETS												
• MATERIALS PROCESSING DEVELOPMENT MODULES												
• MILITARY TECHNOLOGY RESEARCH MODULES AND PALLETS												
BERTHING PORTS REQUIRED	2	2	2	3	3	4	4	5	5	6	6	6
BERTHING PORTS AVAILABLE	2	2	2	8	8	9	9	9	9	8	8	8
CREW SIZE REQUIRED	3.7	3.5	4.8	5.6	5.8	8.4	8.1	10.6	10.6	12.4	13	13.9

820063-024

SOC CONFIGURATION/SUBSYSTEM LIMITATIONS

Many of the SOC limitations and their workarounds were described above. In addition to these, attention is focused on the electrical power system requirements.

Our estimates of the average power required to support the various mission modules were summed on a yearly basis for the various modules that would be on-board the SOC at the same time. The results are plotted in the facing figure along with the power available from the SOC during each year.

It is seen that there is a 5 kw power deficiency during 1991 and a substantial shortage after 1993. Due to the exponential solar array degradation characteristics, the power available to support the user modules drops off quite dramatically over the first 3-4 years of solar array life.

There are four possible ways to resolve this "energy crisis":

1. The projected power demands may be too high. It will not be possible to resolve this possibility until preliminary designs of each module and pallet can be created (beyond the scope of this study).

2. The projected mission models for the materials processing, life sciences, and DoD technology research may be too high. A more detailed study would be required to ascertain if this is the case.

3. The SOC Service Modules may have to be redesigned to be able to provide substantially more solar array area (two to four times as much).

4. It may be necessary to not take on research and applications missions seeing as how their requirements begin to dominate the SOC electrical power system design.

SPACE OPERATIONS CENTER

NASA

SOC-1512

Power Required Versus Power Available– Low Mission Model (SBOTV/AB)

BOEING

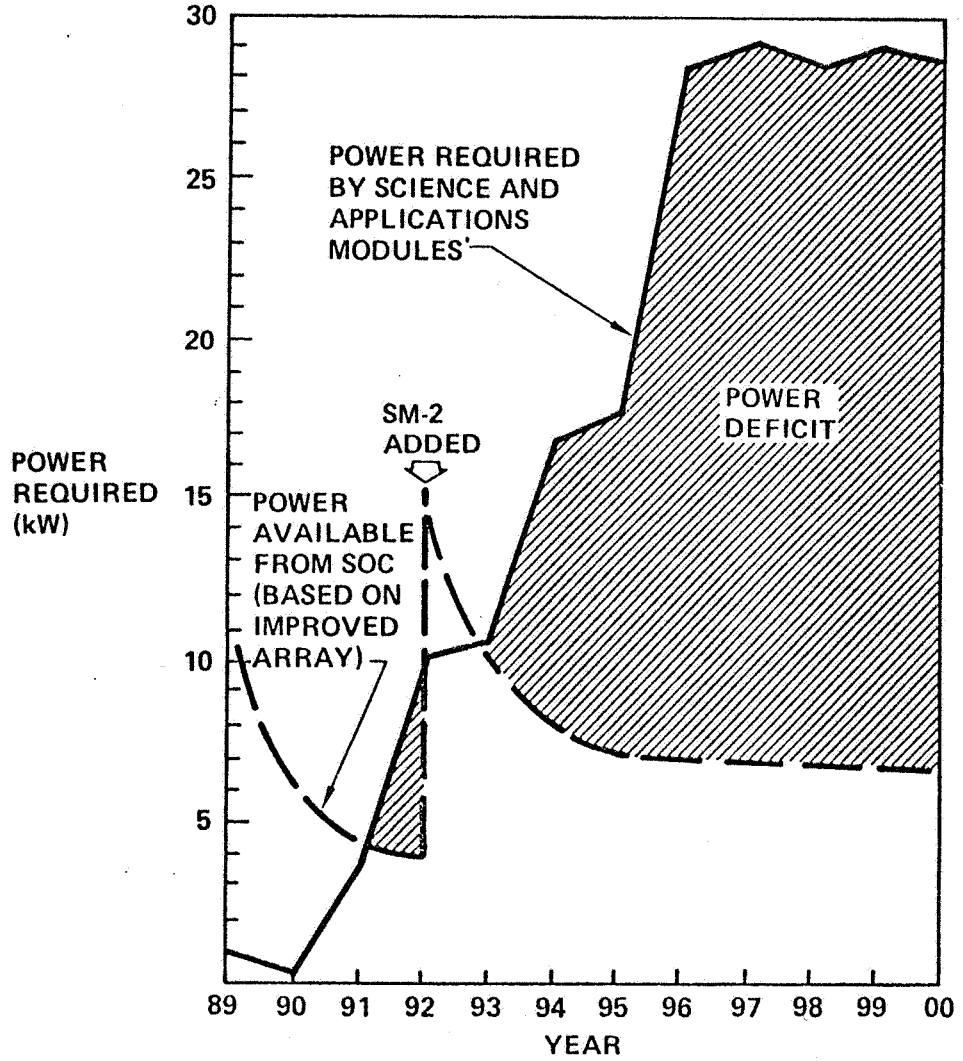

820063-022

MEDIUM MISSION MODEL OPERATIONS ANALYSIS

Payload Time On-Board SOC

The relative amount of time spent handling the various types of missions (flight support, construction, etc.) is illustrated in the facing figure.

The reason that there is such a dramatic drop in "time on-board" between 1989 and 1990 is due to transitioning from one-shift crew operations to two-shift crew operations.

In the first two-three years of the model, the flight support/construction operations dominate the workload. From 1991 and on, the science and applications operations begin to rival the flight support/construction operations in magnitude of time on-board. The satellite servicing missions require a modest amount of time in comparison.

SPACE OPERATIONS CENTER

NASA

SOC-1505

Time Payloads Are on Board SOC– Medium Mission Model (SBOTV/AB)

BOEING

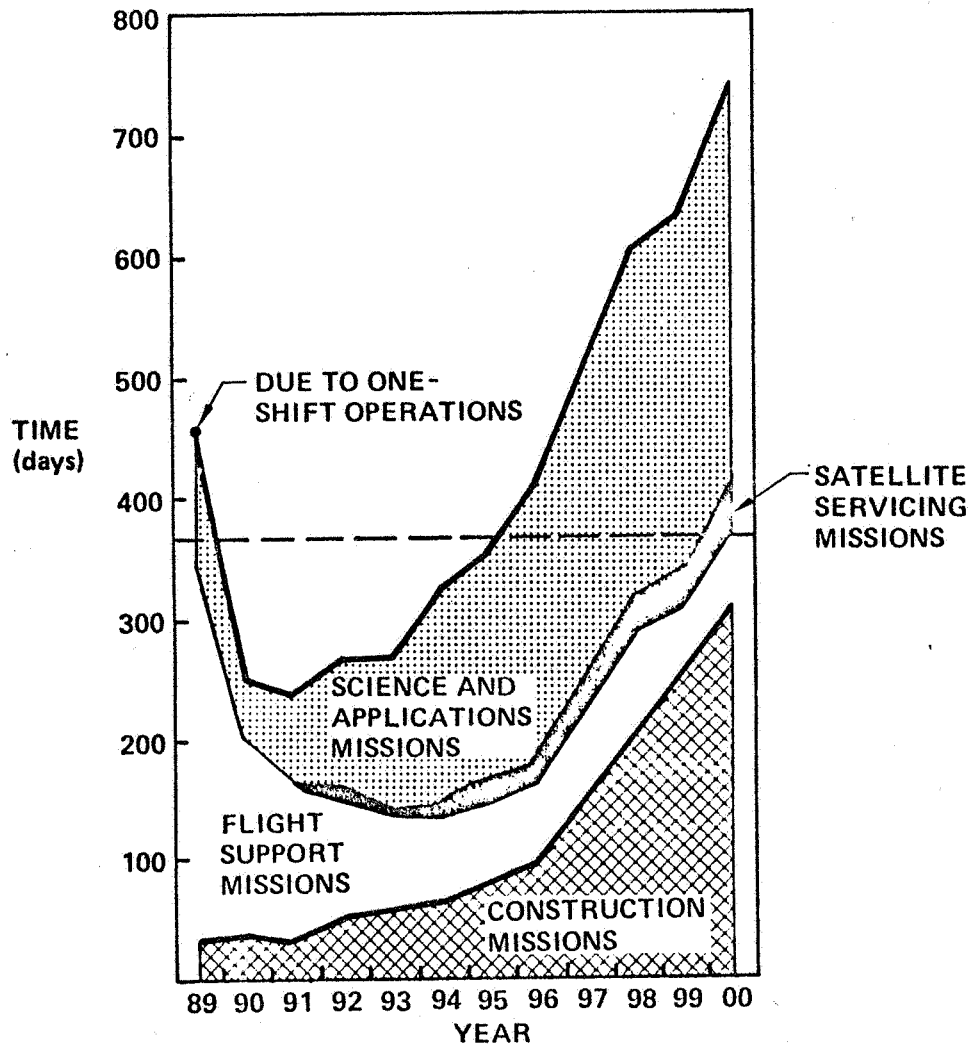

820063-020

VEHICLE OPERATIONS

The number of OTV, Teleoperator Shuttle, and MOTV flights per year are plotted in the facing figure.

Vehicle Operations at SOC for Medium Mission Model (SBOTV/AB)

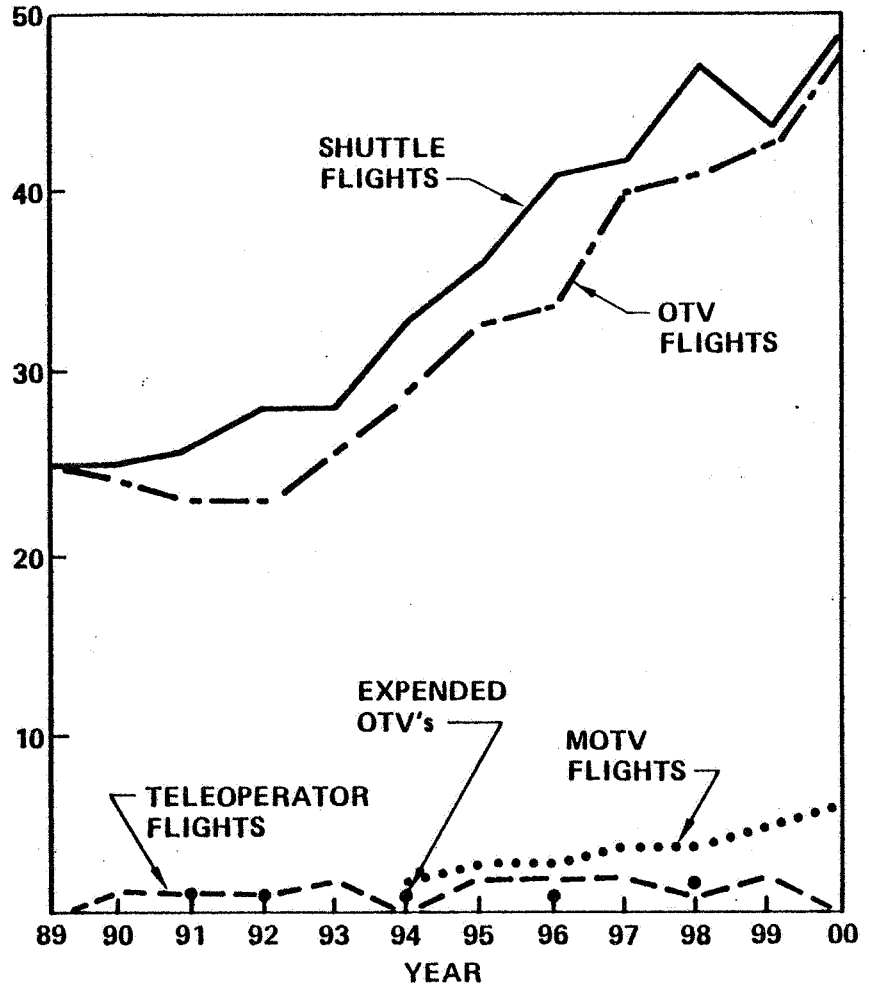

820063-017

FACILITIES/VEHICLES/MISSION MODULES/CREW SIZE REQUIREMENTS

The mission model data has been carefully examined to define the number of SOC modules, the number of vehicles, the number of mission modules, the number of berthing ports required/available, and the crew size required during any year over the 12-year time period, see the facing chart.

The implications that can be derived from this figure are the following:

1. The use of aerobraked space-based OTVs from the beginning of this model requires that the "Initial SOC" be equipped with a hangar, flight support pier, and a propellant storage tank.

2. The second Service Module is not required until the crew size exceeds four (in 1990) thus requiring another Habitat Module. This additional HM will require that the Docking Tunnel be installed.

3. The larger construction projects taken on in 1990 will require that the construction pier and storage facility be added.

4. A second hangar and propellant storage tank are necessary when the second OTV is required (1991). The SOC would then look like the "Growth SOC Configuration."

5. The Teleoperator (TMS) is not required until 1992, the year of the first TMS-delivered co-orbiting satellite.

6. A Mini-Habitat Module is added in 1993 to accommodate the nine man crew size.

7. In 1994, the "Growth SOC Configuration" is outgrown. To accommodate the 13 people, another SM and HM is required. At this juncture, a new SOC dedicated to science and applications missions would be justified.

SPACE OPERATIONS CENTER

Facilities, Vehicles, and Mission Module Requirements for Medium Mission Model (SBOTV/AB)

NASA BOEING

SOC-1481

FACILITIES, VEHICLES, MODULES	89	90	91	92	93	94	95	96	97	98	99	00
SOC FACILITIES AND MODULES												
● SERVICE MODULE 1	▬	▬	▬	▬	▬	▬	▬	▬	▬	▬	▬	▬
● SERVICE MODULE 2		▬	▬	▬	▬	▬	▬	▬	▬	▬	▬	▬
● HABITAT MODULE 1	▬	▬	▬	▬	▬	▬	▬	▬	▬	▬	▬	▬
● HABITAT MODULE 2		▬	▬	▬	▬	▬	▬	▬	▬	▬	▬	▬
● MINIHABITAT MODULE					▬	▬	▬	▬	▬	▬	▬	▬
● DOCKING TUNNEL		▬	▬	▬	▬	▬	▬	▬	▬	▬	▬	▬
● HANGAR	▬	▬	▬	▬	▬	▬	▬	▬	▬	▬	▬	▬
● PROPELLANT STORAGE TANK	▬	▬	▬	▬	▬	▬	▬	▬	▬	▬	▬	▬
● FLIGHT SUPPORT FACILITY PIER			▬	▬	▬	▬	▬	▬	▬	▬	▬	▬
● CONSTRUCTION PIER	▬	▬	▬	▬	▬	▬	▬	▬	▬	▬	▬	▬
● STORAGE FACILITY		▬	▬	▬	▬	▬	▬	▬	▬	▬	▬	▬
VEHICLES												
● OTV	▬	▬	▬	▬	▬	▬	▬	▬	▬	▬	▬	▬
● TELEOPERATOR			▬	▬	▬	▬	▬	▬	▬	▬	▬	▬
● CREW MODULE				▬	▬	▬	▬	▬	▬	▬	▬	▬
MISSION MODULES AND PALLETS												
● LIFE SCIENCES RESEARCH MODULES AND PALLETS						▬	▬	▬	▬	▬	▬	▬
● MATERIALS PROCESSING RESEARCH MODULES AND PALLETS				▬	▬	▬	▬	▬	▬	▬	▬	▬
● MATERIALS PROCESSING DEVELOPMENT MODULES				▬	▬	▬	▬	▬	▬	▬	▬	▬
● MILITARY TECHNOLOGY RESEARCH MODULES AND PALLETS	▬	▬	▬	▬	▬	▬	▬	▬	▬	▬	▬	▬
BERTHING PORTS REQUIRED	1	2	1	4	4	6	5	7	7	7	7	5
BERTHING PORTS AVAILABLE	2	9	9	9	8	13	13	13	13	12	12	12
CREW SIZE REQUIRED	4.75	5.3	6.25	7.75	9.15	12.9	13.5	16.9	18.3	20.3	21.3	23.3

820063-025

SOC CONFIGURATION/SUBSYSTEM LIMITATIONS

Many of the SOC limitations and their workarounds were described above. In addition to these, attention is focused on the electrical power requirements.

The facing figure shows the power required by the science and applications modules versus the amount of power available over the 12-year period. It is seen that there is a serious power deficiency after 1994. Due to the exponential solar array degradation characteristics. the power available to support user modules drops off quite dramatically over the first four years of life. The addition of a third SM (either on-board the original SOC or by adding a new SOC) does not appreciably affect the supply versus demand. What this tells us is that when a second SOC is put into operation, that it will need to have two Service Modules.

SPACE OPERATIONS CENTER

NASA

SOC-1509

Power Required Versus Power Available– Medium Mission Model (SBOTV/AB)

BOEING

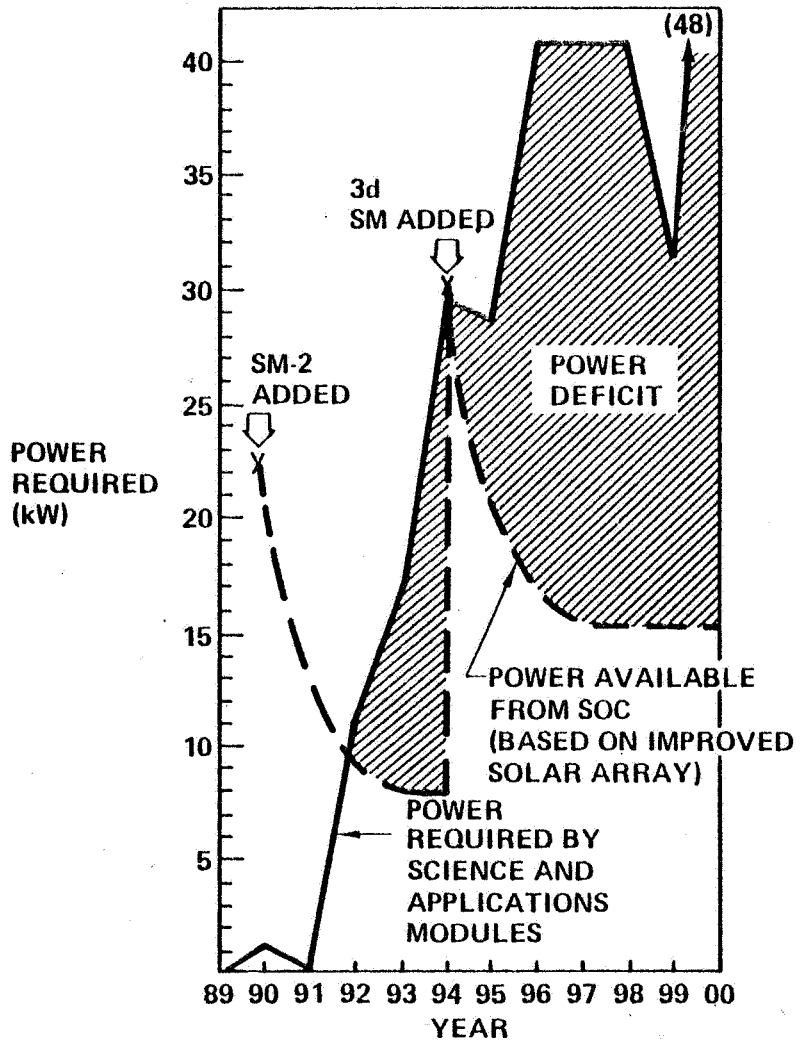

820063-023

HIGH MISSION MODEL OPERATIONS ANALYSIS

Payload Time On-Board SOC

The relative amounts of time spent handling the various types of missions (flight support, satellite servicing, etc.) is illustrated in the facing chart.

The total amount of time on-board SOC drops off in 1990 when the crew size enlarges to where two-shift operations can be conducted. It is seen that the flight support/construction missions predominate for the first three years. From 1991 onward, the construction workload predominates. The satellite servicing missions cause only a small fraction of the workload.

SPACE OPERATIONS CENTER

NASA

SOC-1507

Time Payloads Are on Board SOC– High Mission Model (SBOTV/AB)

BOEING

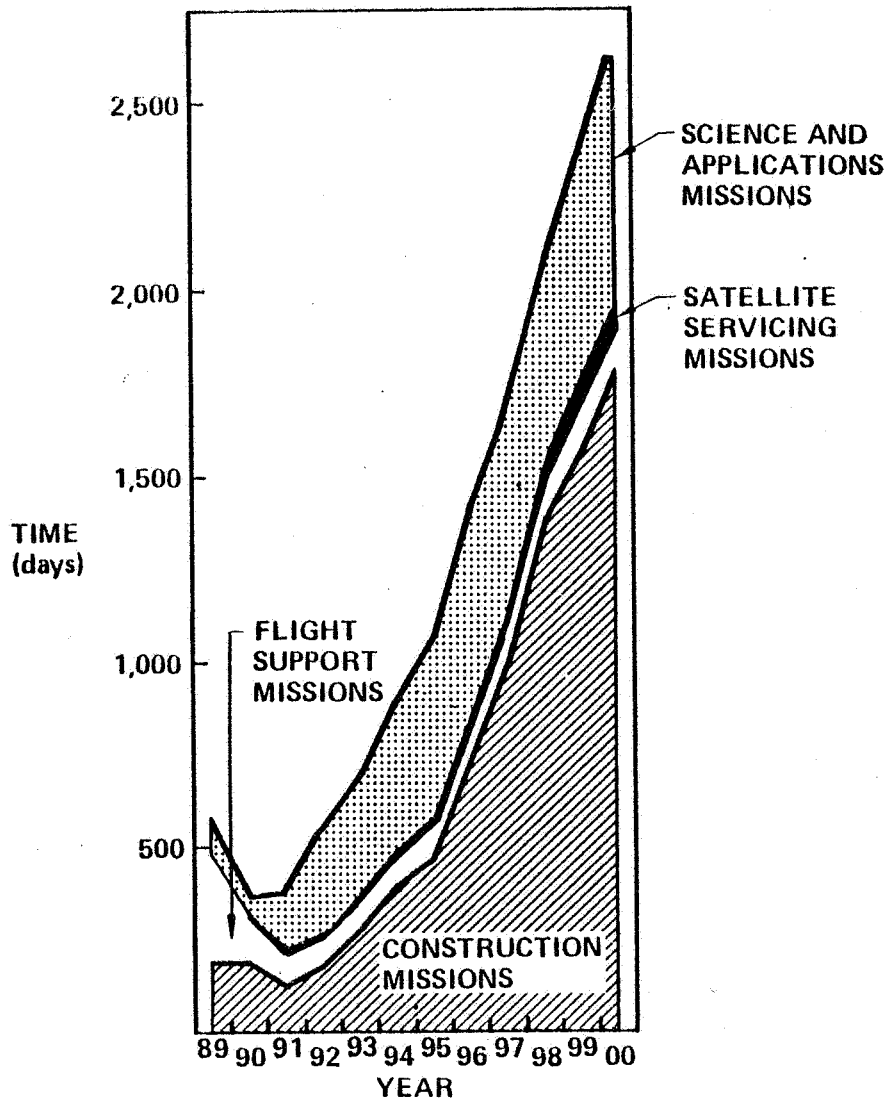

820063-021

VEHICLE OPERATIONS

The number of OTV, Shuttle, Teleoperator and MOTV flights per year are plotted in the facing chart.

SPACE OPERATIONS CENTER

NASA

SOC-1508

Vehicle Operations at SOC for High Mission Model (SBOTV/AB)

BOEING

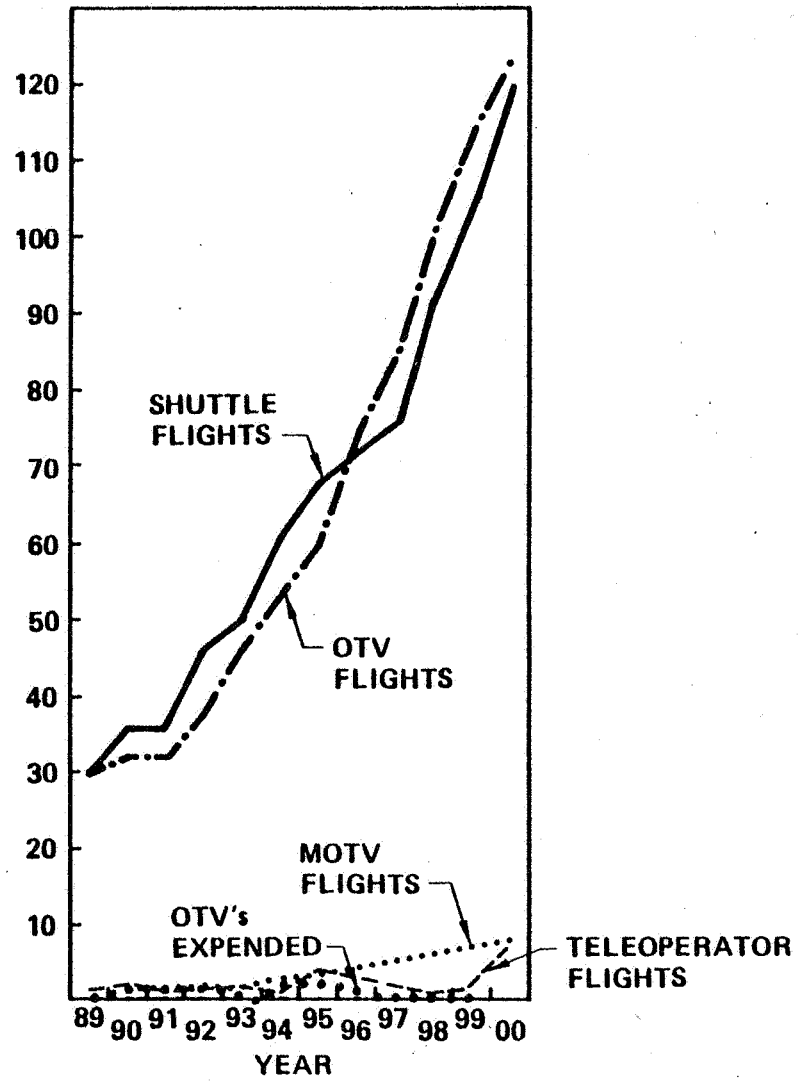

820063-018

FACILITIES/VEHICLES/MISSION MODULES/CREW SIZE REQUIREMENTS

The mission model has been carefully examined to define the number of SOC modules, the number of vehicles, the number of mission modules, the number of berthing ports, and the crew size required during any year of the 12-year time period.

The implications that can be derived from inspection of this figure are the following:

1. By the year 1992, a second SOC, sized for a crew of eight, will be required.

2. By 1993, a third SOC is required.

3. By 1995, a fourth SOC is required.

4. By 1996, a fifth SOC is required.

5. By 1997, a sixth SOC is required.

6. By 1998, a seventh SOC is required.

7. By 2000, an eighth SOC is required.

8. The Mini-Habitat Modules are added in 1991, 1994-96 and 1999-00 to avoid adding a full size HM.

SPACE OPERATIONS CENTER

NASA

SOC-1516

Facilities, Vehicles, and Mission Module Requirements for High Mission Model

SBOTV/AB

BOEING

Facilities, vehicles, and modules	1 SOC			2 SOC's	3 SOC's		4 SOC's	5 SOC's	6 SOC's	7 SOC's		8 SOC's
	89	90	91	92	93	94	95	96	97	98	99	00
SOC facilities and modules												
Service module 1	1	1	1	2	3	3	4	5	6	7	7	8
Service module 2	1	1	1	2	3	3	4	5	6	7	7	8
Habitat module 1	1	1	1	2	3	3	4	5	6	7	7	8
Habitat module 2	1	1	1	2	3	3	4	5	6	7	7	8
Minihabitat module			1			1	1	1			1	1
Docking tunnel	1	1	1	2	3	3	4	5	6	7	7	8
Hangar	2	2	3	3	3	3	4	4	5	5	5	5
Propellant storage tank	2	2	2	2	2	2	3	3	4	4	4	4
Flight support facility pier	1	1	1	2	3	3	4	5	6	7	7	8
Construction pier		1	1	2	3	3	4	5	6	7	7	8
Storage facility		1	1	2	3	3	4	5	6	7	7	8
Vehicles												
OTV	2	2	2	2	2	2	3	3	4	4	4	4
Teleoperator	1	1	1	1	1	1	1	1	1	1	1	1
Crew module			1	1	1	1	1	1	1	1	1	1
Mission modules and pallets												
Life sciences research module and pallet		1	1	2	2	2	2	2	2	2	2	3
Material processes research module and pallet	1	1	2	4	4	4	4	4	4	4	4	4
Material processes development module		1	1	2	2	6	6	6	6	6	6	6
Military technical research module and pallet	2	2	3	3	4	5	5	5	6	6	6	6
Number of berthing ports required	3	5	8	11	12	18	18	18	18	18	19	20
Number of berthing ports available	7	7	5	Depends on how these missions are divided								
Crew size	6	7.5	11.4	19	23	28.6	34.8	42.2	46.4	56	60	68.2

820063-026

Crew Requirements Analysis

CREW REQUIREMENTS

There were three primary objectives for this analysis. These objectives are listed below using the NASA statement of work descriptions.

Objective 1—Define Integrated Crew Operations Requirements

Summarize on a yearly basis, the crew requirements (i.e., number of man-months and crew skills) to perform construction work, orbital transfer vehicle support, satellite servicing, science and applications, and SOC housekeeping and control duties.

Objective 2—Develop Crew Labor Estimating Relationships

Define a set of suitable crew labor estimating relationships based on a selected mission model that could be used in the analysis of variations of mission models.

Objective 3—Define Range of Crew Requirements

Define the range of crew requirements corresponding to the range of mission models.

Analytical Approach

This task was integrated with the mission modeling tasks and the operations analysis tasks.

SPACE OPERATIONS CENTER

NASA

SOC-1496

Crew Requirements Analysis

BOEING

- Objectives
  - Define yearly crew size and crew skills for low, medium, high mission models
  - Define crew labor estimating relationships
- Approach
  - Define crew skills
  - Define crew skills/time required versus operations
  - Integrate crew skills analysis with computerized mission model analyses
  - Convert tabular data to graphics and interpret results
  - Analyze tabular data to define crew labor estimating relationships

820063-006

CREW SKILLS

The operations analysis data from the previous SOC study was examined to define the necessary crew skills for performing the flight support, construction, satellite servicing, and base housekeeping operations.

The new operations analysis data from this study extension was examined to define the necessary crew skills for performing the materials processing, life sciences, and satellite servicing operations.

The lists of crew skills were then integrated to compose a composite list of the crew skills required at the SOC to perform the spectrum of potential missions. The facing chart shows an example of how one of the crew skills was defined. This table lists the crew skill title, the SOC location where this skill is most often utilized, the basic tasks that the person with the skill would be expected to perform, and the basic requirements for this skill.

In this discussion, the word "skill" and the word "job" will be used interchangeably. Please note, however, that while skill = job neither one of these words are meant to be interpreted to represent a specific crew person.

At this point in time, it is too early to define the skills mix required for each of the SOC crewmembers. In the early years, no doubt, each crew person will be cross-trained for more than one crew skill. As the SOC mission activity increases with time, it is likely that some of the crewpersons can become more and more specialized to the point where they would be trained for only one skill.

SPACE OPERATIONS CENTER

NASA

SOC-1496

Sample Crew Skill Definition

BOEING

Job Title

EVA Operator
(EVA Workstation)

Work Location

EVA-selected workstation locations

Basic Tasks

- Perform hands-on mechanical assembly, disassembly, repair, and maintenance tasks as required.
- Maintain voice and visual contact with other EVA and IVA crewman as required.
- Serve as an observer of other EVA activities and participate in rescue operations if required.
- Perform external inspections of spacecraft that dock with SOC and co-orbit with SOC.
- This crewman will perform servicing tasks on spacecraft located in a hangar.
- Perform work during OTV preparation, OTV and payload mating, and prelaunch activities as required.

Requirements

- Mechanical aptitude
- EVA qualified
- Skilled in use of handtools

820063-007

CREW SKILLS ALLOCATION TABLES

To facilitate the generation of crew utilization statistics by the Crew Utilization Code it was necessary to create a set of tables that allocated the various crew skills to the various mission operations. The facing chart shows an example of one of the tables that lists the various operations, the time required to perform the operations, and the crew skills allocated to the operations.

In the table the operations times listed are in days. These duration times were derived in one of several ways:

- Derived from operations and timeline analyses performed for the construction missions. Where a specific operation had differing amounts of time defined in the various construction analyses, the various times were averaged.
- Derived from the operations analyses performed during this study extension (e.g., satellite servicing, OTV handling, research missions, etc.).
- Derived from other studies—some of the duration times (e.g., the OTV maintenance time) were derived from other studies.
- Derived by analogy—if an operation was the reverse of a previously defined operation (e.g., "crew egress" is essentially the reverse of "crew ingress"), the analogous operation was given the same time duration.
- Derived specifically for the analysis (e.g., base operations time).

The derivation of these various operations times have been recorded for future reference.

The numbers shown in the crew skills allocations are percent of operation duration time each skill is required. These percentages were estimated from the data used to calculate the operation time or a judgment was made. Particular attention was paid to the crew skill descriptions in making sure that the proper crew skills were utilized for each operation. The following chart gives a summary of the crew skills applied to the various classes of missions.

OTV CREW SKILLS MATRIX

SOC-1403

NO.	ITEM	TIME	IVA OPERATOR	EVA C/P OPERATOR	EVA WORKER	TEST & C/O ENGR	ELEC/MECH ENGR	PROP/FLUIDS SPCLST	FLT CONTR/SYS ENGR	PILOT	MATLS SPCLST	VISITING RESEARCHER	LIFE SCI SPCLST/DR	GENERAL
1	MAINTAIN	1.15/0.2*	100		150	50	75	25	5					
2	MATE TO PLD	0.131	100	67	67									
3	STAGE/STAGE MATE	0.21	100	67	67									
4	OTV/PLD C/O	0.555	5	5	5	100	5	50	25					
5	LAUNCH	0.082	100			100		100	100					
6	CAPTURE	0.0416	100						50					
7	CREW MOD. MAINTENANCE	1.71	100		150	50	75							
8	CREW MODULE MATE	0.131	100	67	67									
9	CREW INGRESS	0.0625				100	100			100				
10	CREW EGRESS	0.0625				100	100			100				
11	CREW MODULE DEMATE	0.121	100	100	100									
12	BALLUTE EXCH.	1.146	11	22	150									
13	MISSION OPS	PER INPUT				100	100			100				

*1.15 FOR SPACE-BASED STAGE; 0.2 FOR GROUND-BASED

SOC Crew Skill and Mission Allocation

SOC skill group	Flight support	Construction	Satellite servicing	Life sciences	Material processes	Base operations
IVA operator (cherrypicker)	X	X	X	X	X	X
EVA operator (cherrypicker)	X	X	X	X	X	X
EVA operator (workstation)	X	X	X			X
Test and checkout engineer	X	X	X	X	X	X
Electrical-mechanical engineer	X		X			X
Propellant-fluid specialist	X		X			X
Flight control-systems engineer	X					X
Pilot (MOTV)	X		X			
Materials researcher					X	
Customer materials process development specialist					X	
Life sciences researcher				X		
Miscellaneous	X					X

820063-027

LOW MISSION MODEL

The crew size requirements for the Low Mission Model (SBOTV/AB)* is shown in the facing chart. This figure shows that the crew size requirements vary from 3.5 to 13.9 people over the 12-year time span.

From 1989 through 1993, the crew size is primarily determined by the flight support/construction missions with the science and applications missions contributing an ever increasing workload. From then on, the science and applications workload predominates. The satellite servicing workload is intermittent and of an order of magnitude less than the other operational categories.

It is seen that the EVA Worker skill is the most needed until 1994 when the Materials Specialist skill takes over as the dominant skill requirement. The IVA Operator is second to fourth place in demand.

* SBOTV/AS = Space based OTV, aerobraked

SPACE OPERATIONS CENTER

NASA

SOC-1523

Summary of Crew Size Requirements— Low-Mission Model

Spacebased Aerobraked OTV's

BOEING

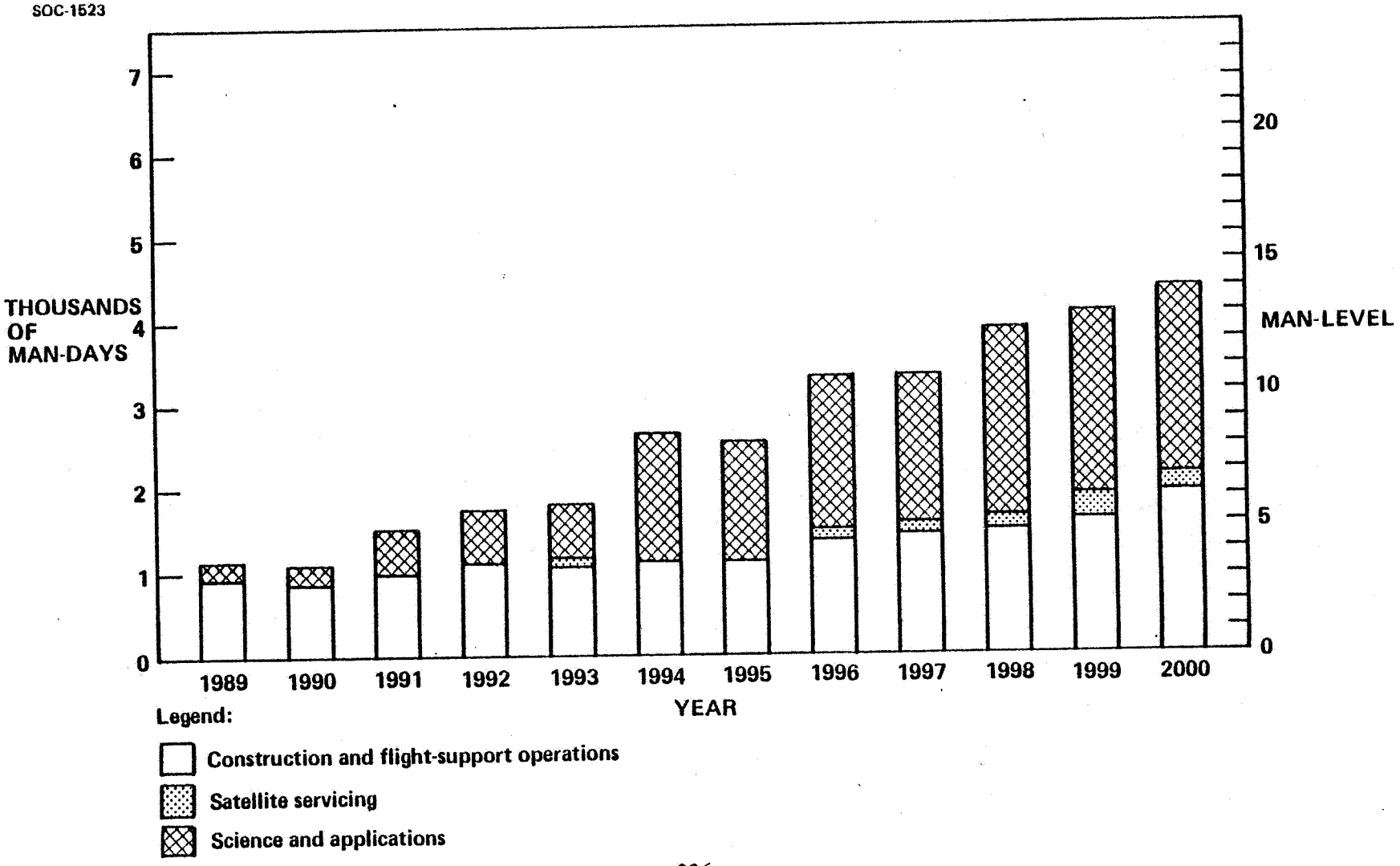

820063-033

MEDIUM MISSION MODEL

The crew size requirements for the Medium Mission Model (Space-Based Aerobraked OTV) is shown in the facing chart. This figure shows that the crew size requirements vary from 4.75 to 23.3 people over the 12-year time span.

From 1989 through 1991, the crew size is primarily determined by the flight support/construction missions with the science and applications missions contributing more and more workload. In 1992, the first satellite servicing missions come into play. By 1993, the science and applications missions begin to demand as much crew time as the flight support/construction missions. From 1994 through 1997 the science and applications missions workload predominates. From 1998 through 2000, the flight support/construction missions begin to predominate again. The satellite servicing workload steadily increases over the years but its overall workload demands are an order of magnitude less than the other two mission categories' workloads.

As can be seen from this chart, it looks like it would be desirable to employ a second SOC to pick up the science and applications missions about 1995. This would allow the original SOC to comfortably handle the flight support/construction missions and satellite servicing missions with 8 to 12 people.

It is seen that the EVA Worker skill is always the most predominantly required skill. The IVA Operator skill is in second place until the Materials Specialist and Life Sciences Specialist skills begin to predominate (about 1992) as the science and applications missions begin to predominate. The EVA Cherrypicker Operator skill ranks third place in the first two years, but drops back to fourth to sixth place as the years progress.

SPACE OPERATIONS CENTER

NASA

SOC-1520

Summary of Crew Size Requirements— Medium-Mission Model

Spacebased Aerobraked OTV's

BOEING

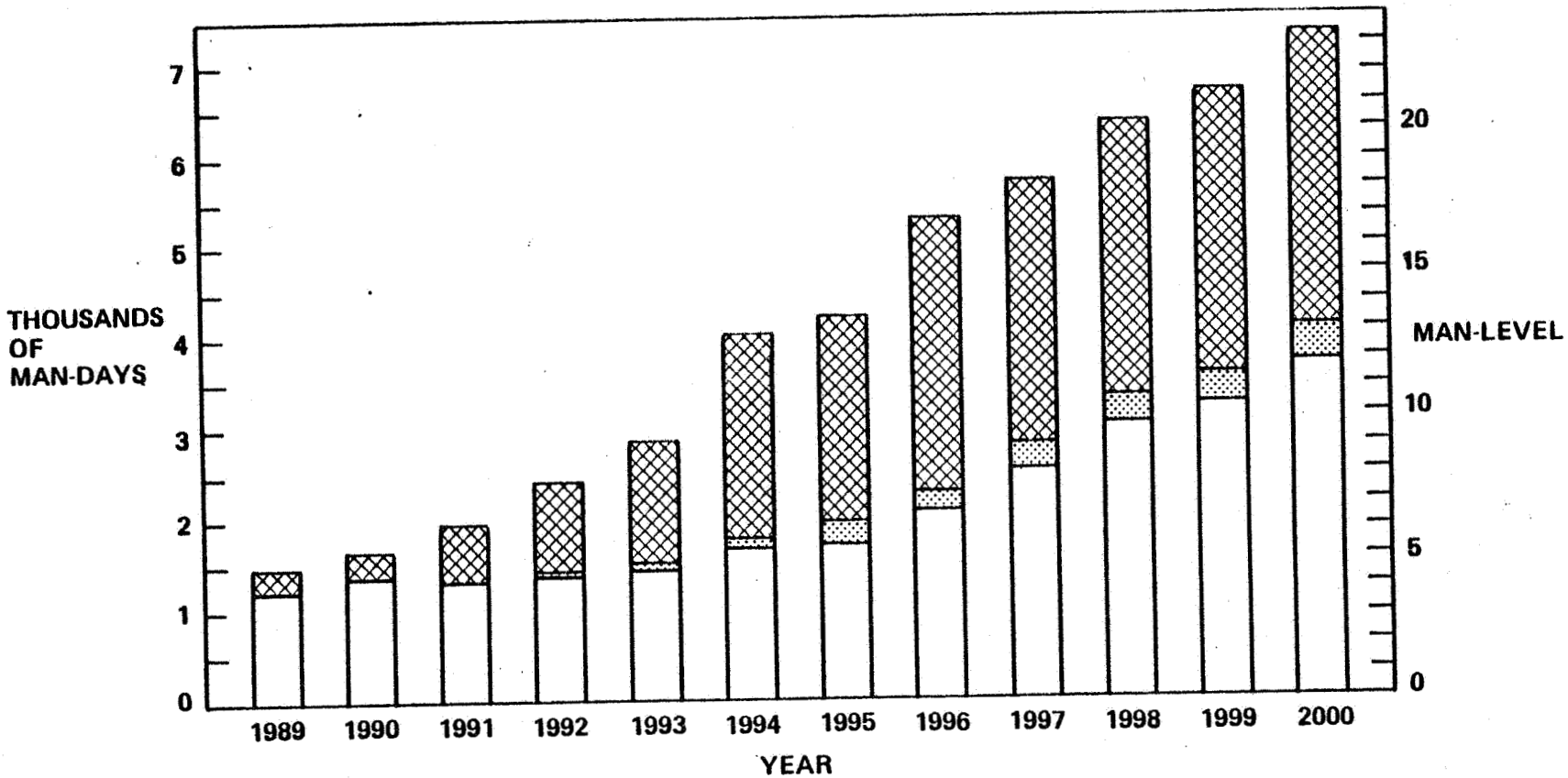

Legend:

- Construction and flight-support operations
- Satellite servicing
- Science and applications

820063-034

HIGH MISSION MODEL

The crew size requirements for the High Mission Model (Space-Based Aerobraked OTV) is shown in the facing chart. This figure shows that the crew size required varies from 5.95 to 68.2 over the 12-year period.

During the first three years, the flight support/construction operations dominate the workload. For about three years (1992-1994) the science and applications workload is about the same as fight support/construction. For the remaining seven years, the flight support/construction operations dominate. Construction dominates in this category.

SPACE OPERATIONS CENTER

NASA

SOC-1522

Summary of Crew Size Requirements– High-Mission Model

Spacebased Aerobraked OTV's

BOEING

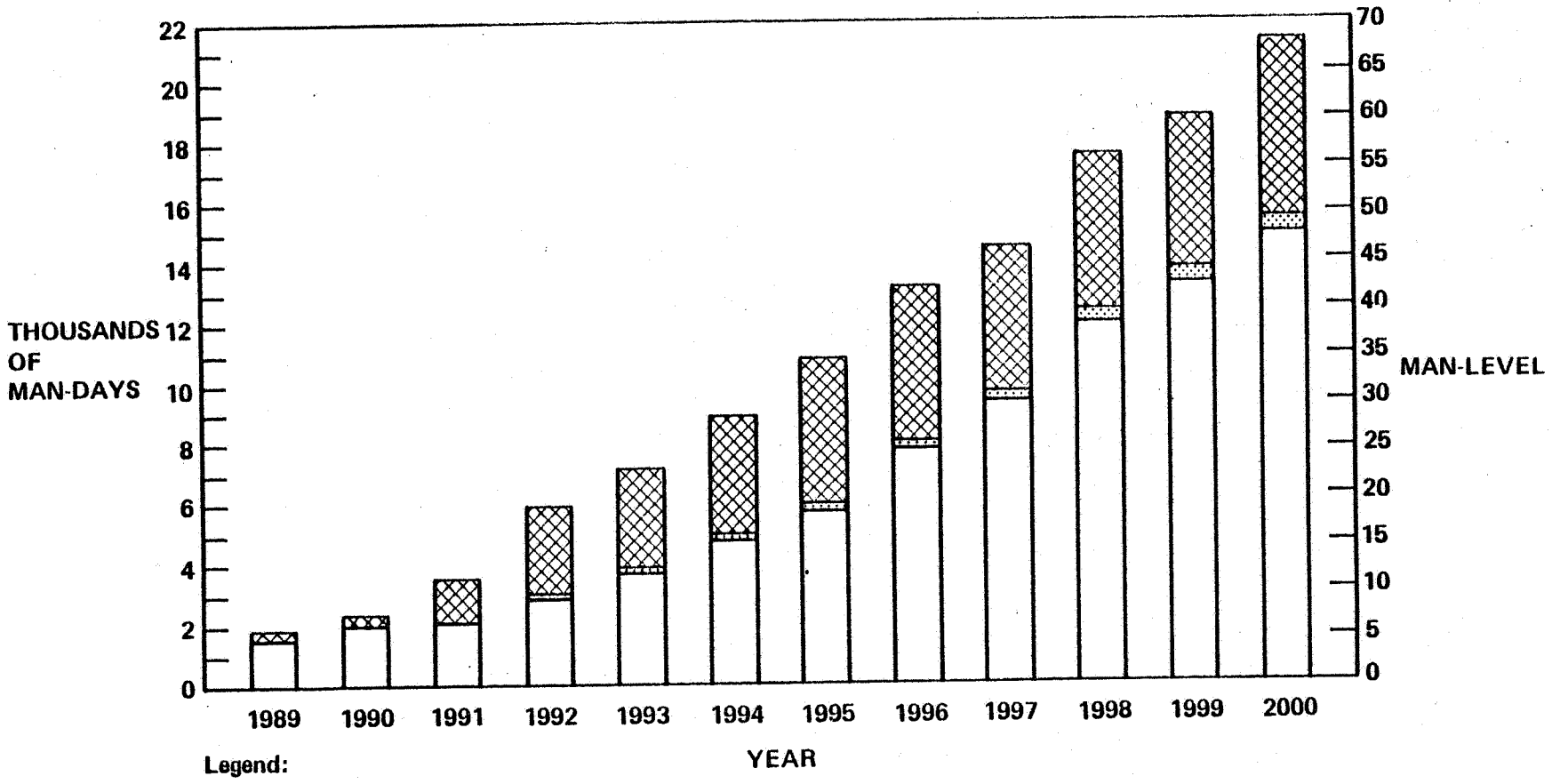

820063-035

CREW SKILLS REQUIREMENTS

The facing chart shows an example of a yearly crew skills utilization requirements summary produced for each of the 12 years for each of the 3 mission models.

SPACE OPERATIONS CENTER

NASA

SOC-1521

1993 Crew Skills Requirements— Medium-Mission Model

Spacebased Aerobraked OTV's

BOEING

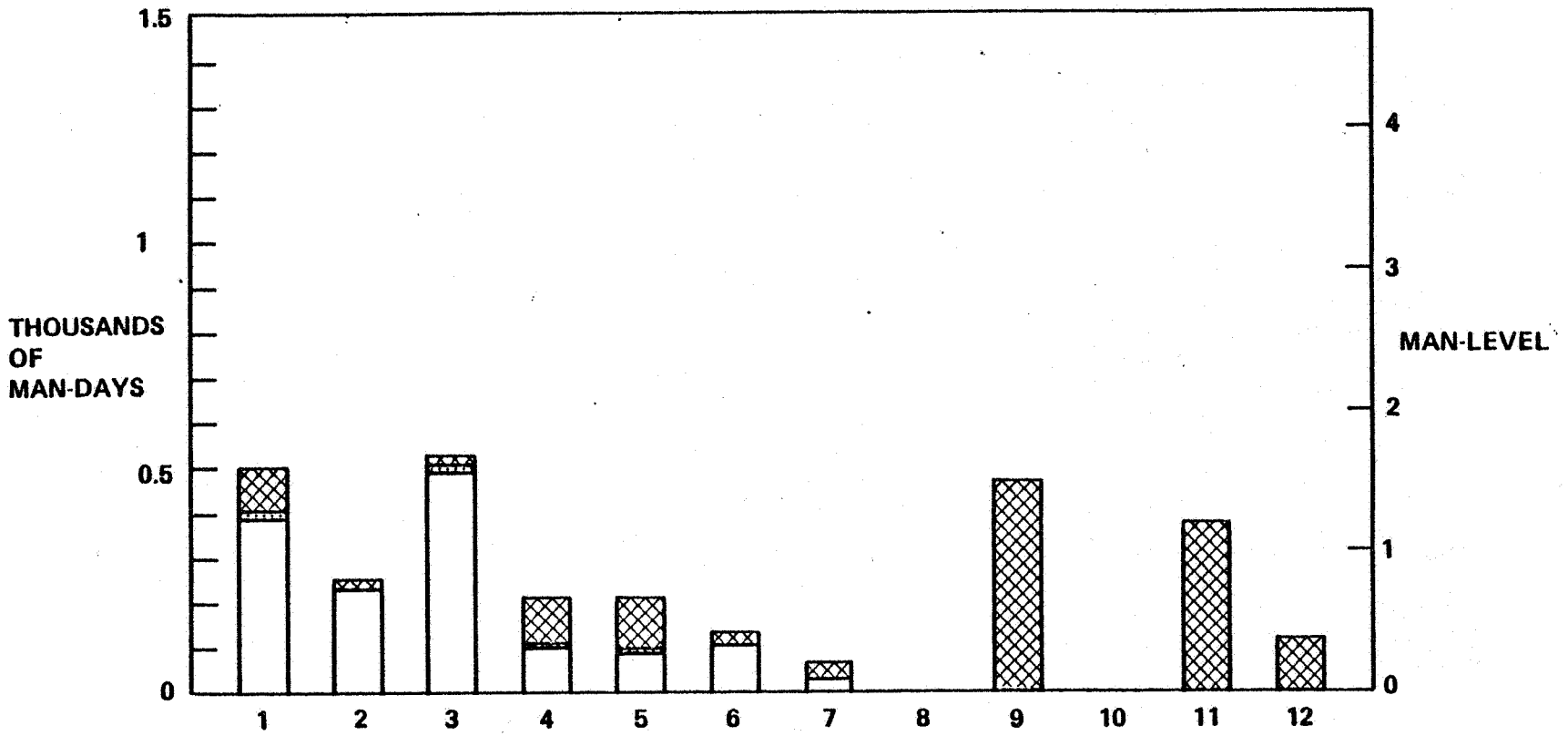

Legend:

- Construction and flight-support operations
- Satellite servicing
- Science and applications

1. IVA operator
2. EVA operator (CP)
3. EVA operator (workstation)
4. Test and checkout engineer
5. Electrical-mechanical engineer
6. Propulsion-fluid specialist
7. Flight control-systems engineer
8. Pilot
9. Materials specialist
10. Visitor
11. Life sciences specialist
12. General

820063-036

CREW LABOR ESTIMATING RELATIONSHIPS

Objective

The objective of this analysis was to derive a set of crew labor estimating relationships that could be used in the analysis of a variety of mission models.

This objective has been satisfied by the derivation of a set of simple estimating values, and a computerized estimating system.

Simple Crew Labor Estimating Values

In order to provide a simple-to-use crew labor estimating system, the following charts were produced. The data on these charts were derived from the computerized Crew Utilization Code outputs described earlier.

The output data was examined to find example cases of the following missions and operations:

- Satellite Delivery Missions
- Construction Missions
- Satellite Servicing Missions
- Pallet/Module Exchange Missions
- Crew Rotation/Resupply Missions
- Base Housekeeping Operations
- OTV Replacement Delivery Missions

Each of the figures show one or more sample cases for these missions. In some cases, a specific recommended estimating value is given for each mission and operation type for application to new missions.

Computerized Crew Labor Estimating Relationships

The more sophisticated approach to estimating crew labor requirements has already been addressed. The Crew Utilization Code, its input data, and the Payload Data provide all of the necessary mechanisms for analyzing any new mission model to ascertain the crew skills and manning levels required.

SPACE OPERATIONS CENTER

NASA

SOC-1548

Estimating Values for Crew Man-Days and Time on Board Space Operations Center

Satellite Delivery Missions

BOEING

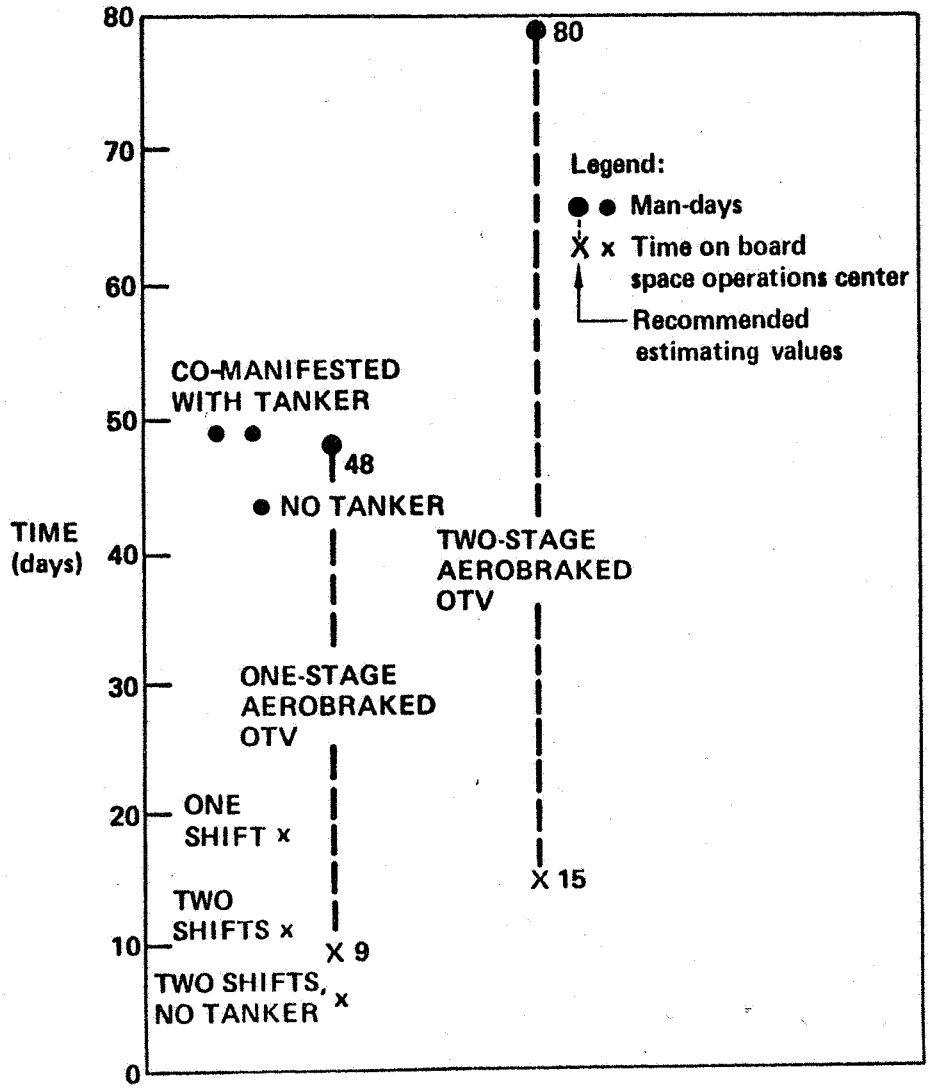

S20063-037

SPACE OPERATIONS CENTER

NASA

SOC-1547

Estimating Values for Crew Man-Days and Time on Board Space Operations Center

Construction Missions

BOEING

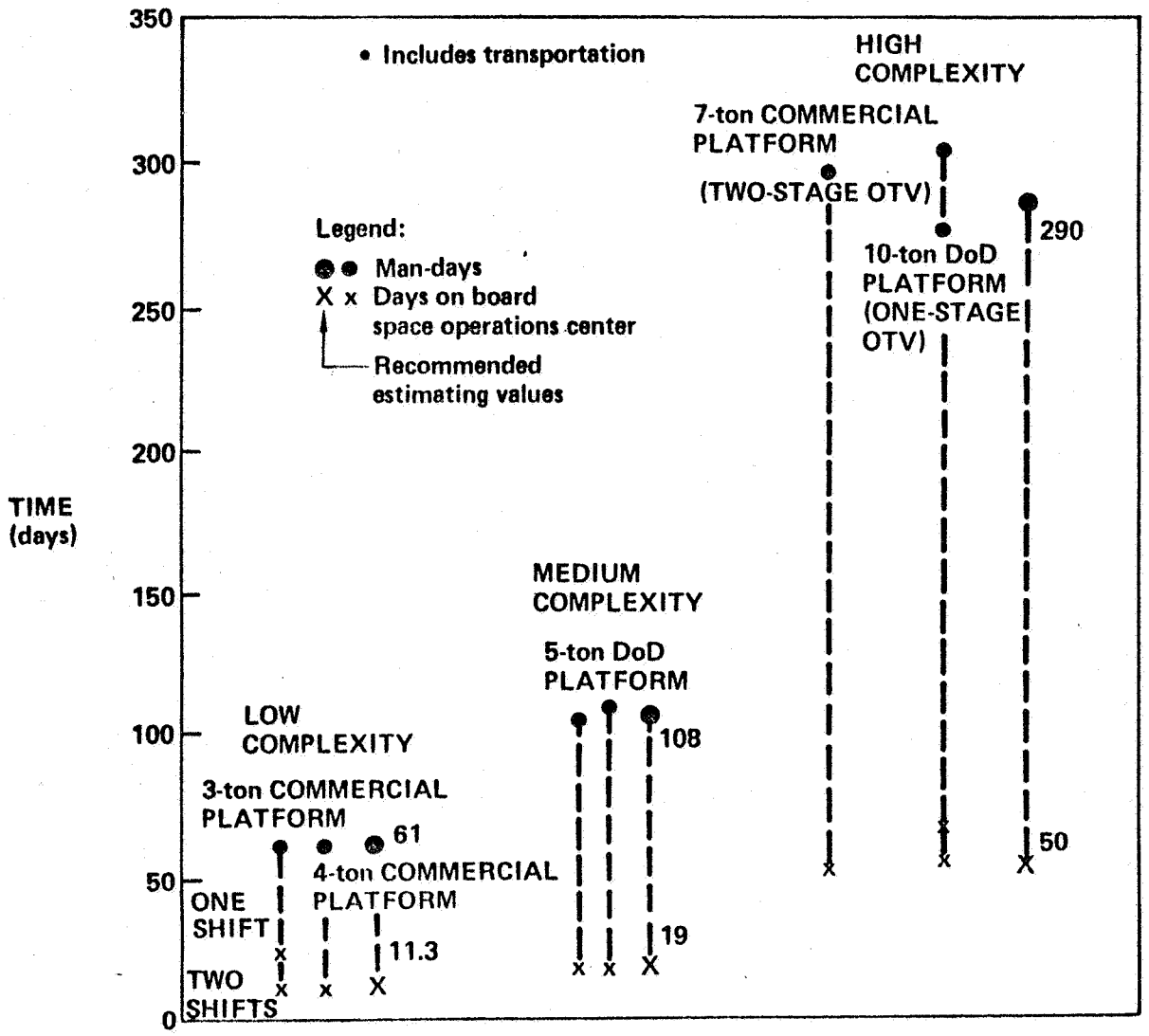

820063-038

SPACE OPERATIONS CENTER

NASA

SOC-1546

Estimating Values for Crew Man-Days and on Board and Away From Space Operations Center

Satellite Servicing Missions

BOEING

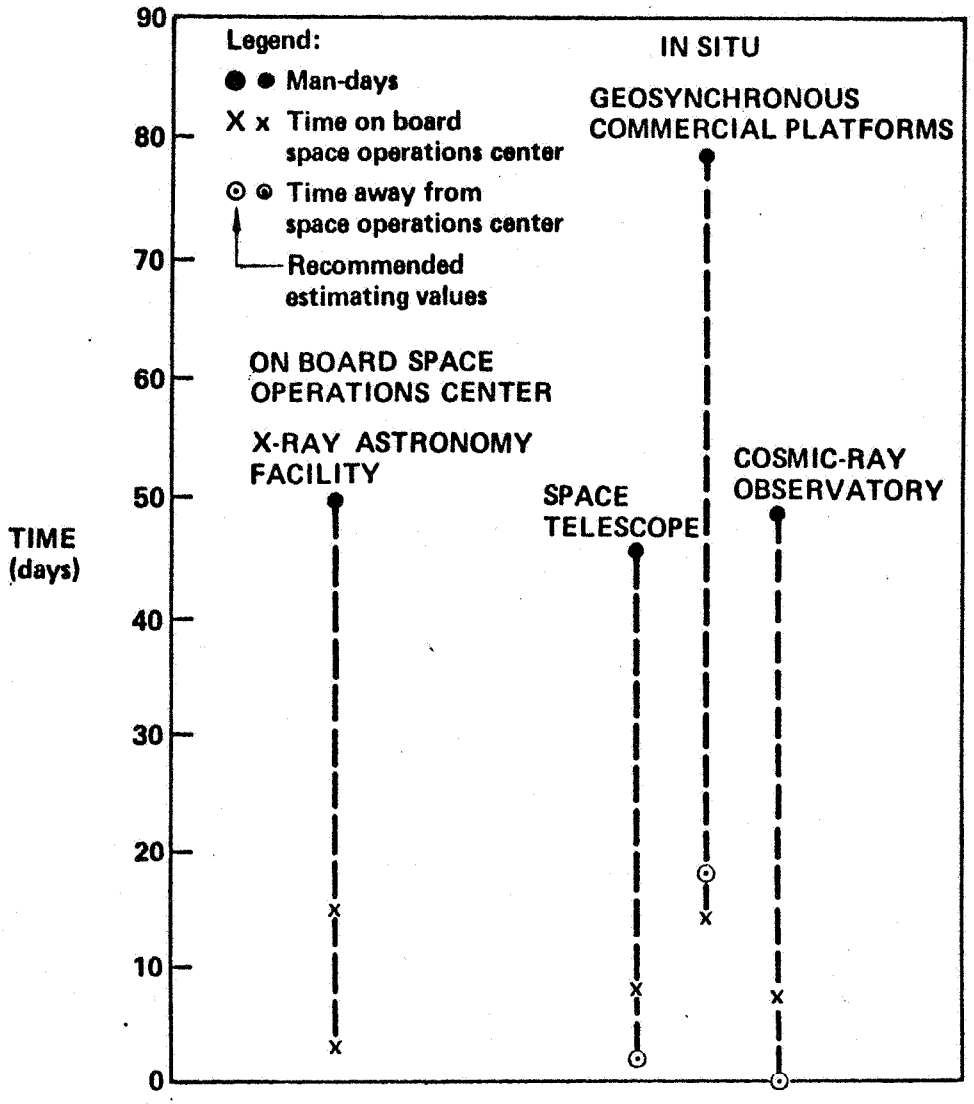

820063-039

SPACE OPERATIONS CENTER

NASA

SOC-1545

Estimating Values for Crew Man-Days and Time on Board Space Operations Center

Miscellaneous Operations

BOEING

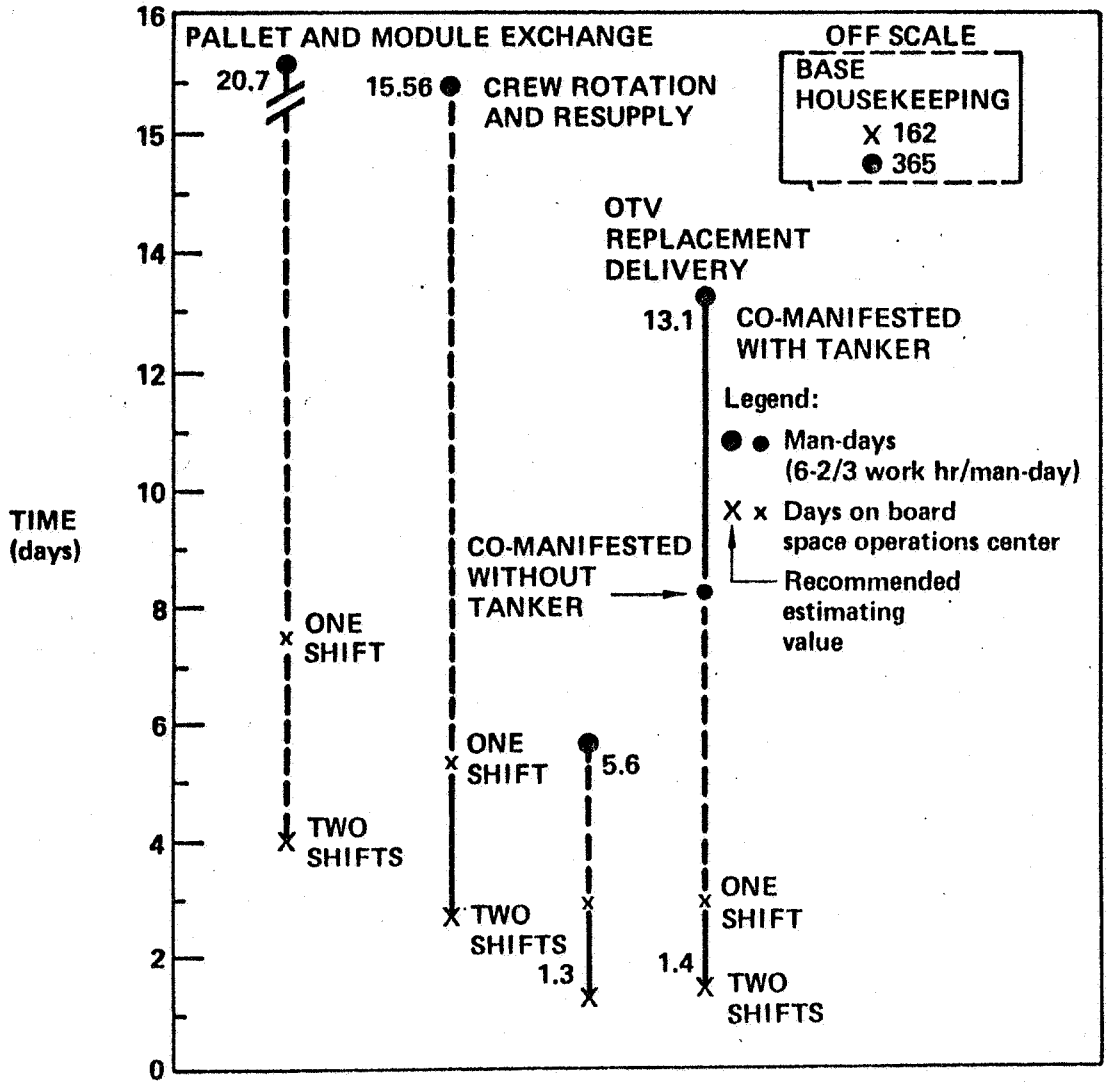

820063-040

Satellite Servicing, Test,

and

Checkout

SOC SATELLITE SERVICES GROUND RULES

The analysis of satellite services for the Space Operations Center is focused on the operational configuration defined for SOC during the previous Boeing study. SOC initial and operational configurations are shown in the sketches opposite. Satellite service concepts for SOC shall be common with the orbiter, wherever possible. Maximum use of existing equipment (or those under development, such as the open cherry picker) shall also be a goal in order to achieve low development costs. Candidate satellite service equipment concepts have been recently defined by Grumman and Lockheed.

SOC SATELLITE SERVICES GROUND RULES

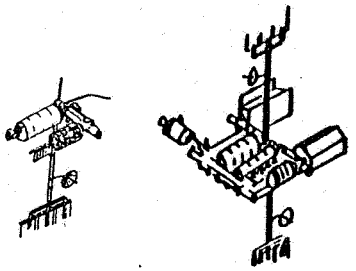

- SOC CONFIG DEFINED IN BOEING FINAL REPORT
  D180 – 26495-4, 7/81, NAS 9 – 16151

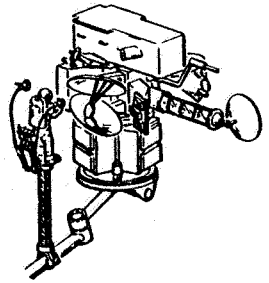

- STS SAT SERVICES CONCEPTS
  - GAC FINAL REPORT LSS-SSS-RP009, 7/81, NAS 9 – 16120
  - LMSC FINAL REPORT LMSC D764514, 7/81, NAS 9 – 16121
- STANDARDIZE ON-ORBIT SERVICE OPS WITH ORBITER
- MAXIMIZE USE OF EXISTING EQUIP OR THOSE UNDER DEVEL

GRUMMAN

R81-2100-166B

SOC SATELLITE SERVICE MISSIONS

The satellite service missions for the Space Operations Center includes those satellites which are in orbit and require periodic tending for continued operations as well as those satellites which are ready for initial launch into orbit. Tended satellites encompass attached payloads, co-orbiting, and remote accessible satellites. Co-orbiting satellites station keep with SOC, those that are initially in the same orbital plane and similiar altitude (within $\approx$ 100 km) and those that are transferred to SOC by a propulsion stage. Remote accessible satellites are remote to SOC but accessible by insitu remote servicing from a manned/remote teleoperated service stage.

The launched satellites are subdivided into two energy orbit categories (i.e., low energy orbits up to 2000 km and high energy orbits above 2000 km)

The types of service operations that can be performed on SOC are listed opposite and keyed to the respective missions. Many of the co-orbiting satellite services are the same as those required for attached payloads. Much of the equipment required to perform these service operations have been previously identified in Satellite Service Studies and some are already under development. While most of these service operations can be performed with the Shuttel Orbiter the SOC can also offer other services. These services include on-orbit assembly of large systems, mating of large upper stages and the option for on-orbit storage of satellite hardware if predeployment test and checkout fails.

SOC SATELLITE SERVICE MISSIONS

	TEND			SAT. LAUNCH	
SERVICE OPERATIONS	ATTACHED PAYLOADS	CO-ORBITING SATELLITES	REMOTE ACCESSIBLE SATELLITES	LOW ENERGY ORBIT	HIGH ENERGY ORBIT
EXAMINATION	●	●	●		
RETRIEVAL		●			
MAINTENANCE/REPAIR	●	●	●		
RESUPPLY	●	●	●		
RE CONFIGURATION	●	●	●		
ON-ORBIT ASSEMBLY				●	●
MATE UPPER STAGES					●
TEST & CHECKOUT	●	●	●	●	●
ON-ORBIT STORAGE		●		●	●
DEPLOY		●		●	●

GRUMMAN

TYPICAL SATELLITES LAUNCHED OR TENDED FROM SOC

Several of the satellites that are in compatible orbits for servicing by SOC (370 km, 28.5 degrees inclination) are shown.

The advanced x-ray astrophysics facility (AXAF) configuration is similar in many respects to the space telescope. It will be designed for space maintenance and the instruments are located at the opposite end to the aperture and accessible through an external door. The instruments are mounted in quadrants of a carousel that rotates the instrument to the focal plane and also makes the instruments accessible at the door opening. The subsystems are contained in a donut-configured structure that has many access doors. Approximately 80 to 100 components are replaceable on the AXAF. The AXAF has no on-board capability to change its orbital location.

The large area module array of reflectors (LAMAR) is mounted on a multimission modular spacecraft (MMS) bus including a propulsion module. The MMS is designed for maintenance but the instrument's capability for space maintenance is yet to be determined.

The x-ray observatory is similar in configuration to the LAMAR as can be seen in the Figure.

The long duration exposure facility (LDEF) is a reusable, gravity-gradient-stabilized, free flying structure. It has no propulsive capability and can accommodate many technology, science, and applications experiments, both passive and active, that require exposure to space. Experiments are mounted on 72 periphery trays and 2 trays at each end. At present, the trays are not designed for replacement in space.

The GEO communications platform is a large structure that unfolds like an umbrella in low earth orbit and is attached to an orbital transfer vehicle, then boosted to geosynchronous orbit.

TYPICAL SATELLITES LAUNCHED OR TENDED FROM SOC

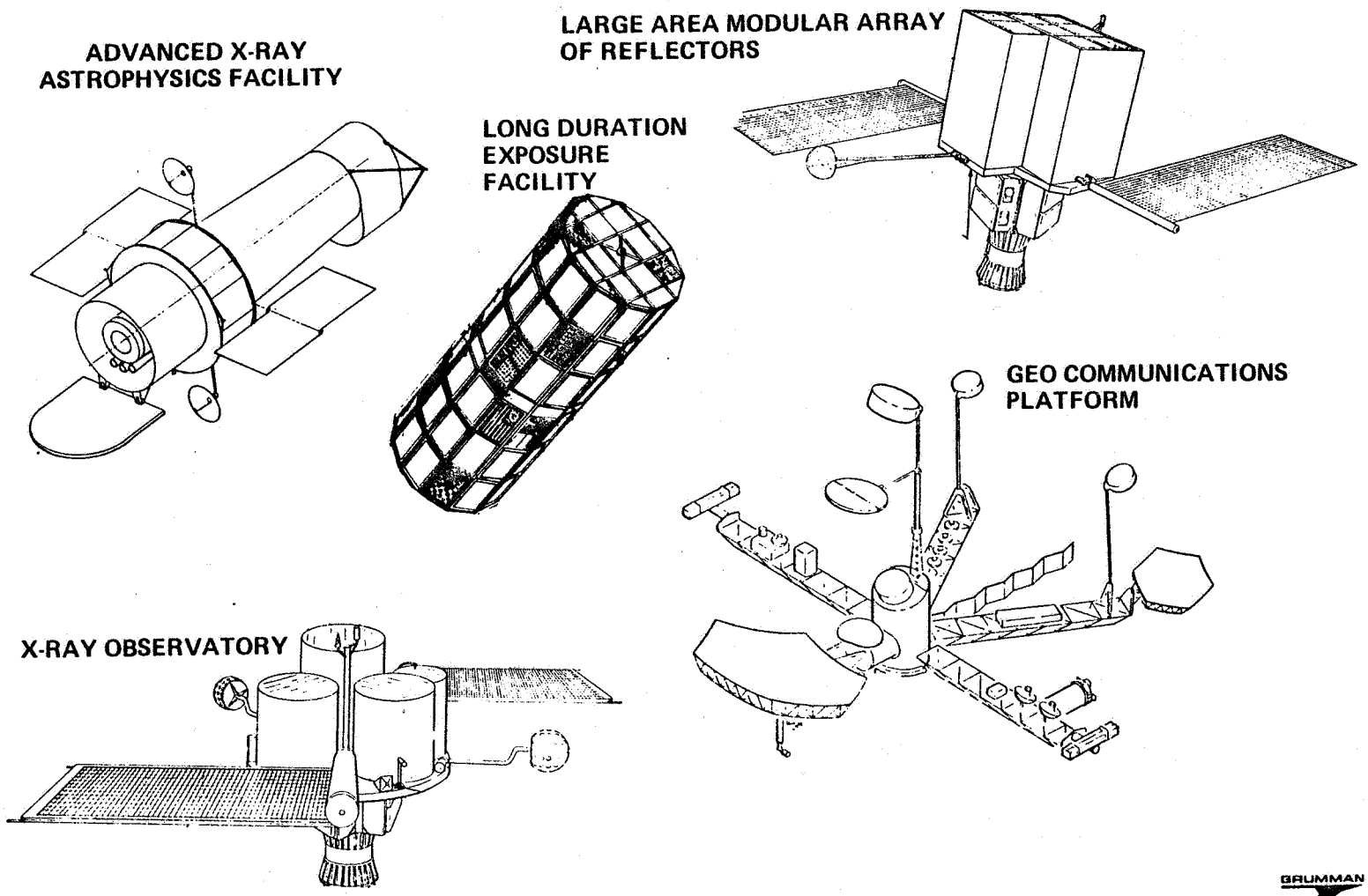

GRUMMAN

R81-2100-41W

STRATEGIES FOR RETRIEVING CO-ORBITING SATELLITES

Three strategies for retrieving co-orbiting satellites, for maintenance/resupply/reconfiguration at SOC, are shown on the facing page. The requirements imposed on SOC will vary in accordance with the proximity or relative position of each co-orbiting satellite to SOC and the satellite's orbit adjust capabilities. In the first retrieval scenario, the satellite is shown to be in the same orbit (altitude and inclination) and station keep with respect to SOC, in this situation, the satellite could either be a free flyer which can be controlled by SOC or any satellite which operates under ground control. When free flying vehicles return to berth or operate in close proximity to SOC they will be controlled by the SOC. For on-orbit safety, ground controlled satellites would not be flown all the way to dock at SOC. Nor is it practical to maneuver the SOC toward the satellite for terminal acquisition. Final satellite retrieval, instead, is accomplished by a proximity operation module (POM) which can be readily deployed and controlled from the SOC.

Many satellites will not actively station keep with SOC but will be allowed to decay in altitude and drift out-of-plane. If the satellite has an orbital maneuvering system, as shown in the second scenario, it could be used to adjust its altitude so that it will drift back toward SOC when it is time for maintenance. A SOC controlled POM can then retrieve these satellites as before, on the other hand, if the satellite does not have an orbital adjust capability it will continue to drift out-of-plane from SOC as shown in the third scenario. The latter satellite must be retrieved by a more capable SOC based vehicle, such as the versatile service stage, which must rendezvous with the satellite, docks and transport it back to SOC.

STRATEGIES FOR RETRIEVING CO-ORBITING SATELLITES

- SATELLITE CONTINUALLY STATION-KEEPS WITH SOC
- POM RETRIEVES SATELLITE

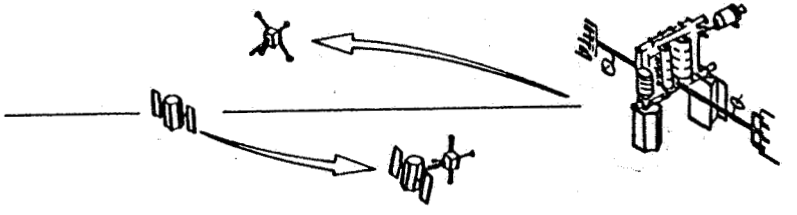

- SATELLITE OPS ALLOWS DRIFT FROM SOC
- SATELLITE APPLIES CORRECTIVE MANEUVERS
- POM RETRIEVES SATELLITE

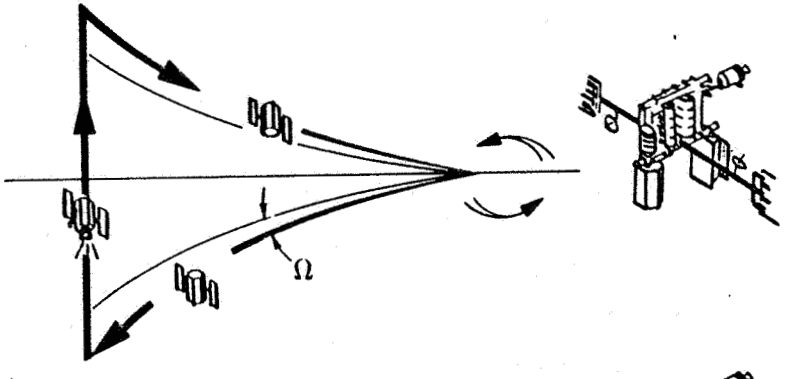

- SATELLITE ALLOWED TO DRIFT FROM SOC
- VSS RETRIEVES SATELLITE

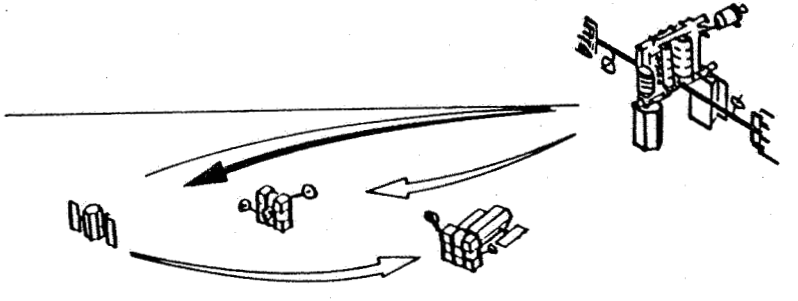

GRUMMAN

ALTERNATE PROXIMITY OPERATIONS EQUIPMENT

The Orbiter can readily rendezvous with a satellite to within a 1000-ft separation distance. However, concerns by some satellite users regarding orbiter thruster plume impingement or contamination during terminal closure maneuvers could preclude direct orbiter rendezvous/retrieval of a spacecraft. Retrieval of satellites within a 1000-ft range can be accomplished by a manned or unmanned proximity operations module (POM), as shown opposite.

The manned POM concept is an adaptation of the work restraint unit (WRU) and can be used in conjunction with an MMU to retrieve moderate size satellites of the multimission modular spacecraft class. The WRU is equipped with an extendable mast and an RMS end-effector mounted to a support structure to allow the astronaut to fly with the snare end-effector in a forward position during satellite engagement and in an aft position during satellite towing operations. An astronaut would fly the manned POM to the satellite, capture it via the satellite's RMS-compatible grapple fixture, and tow the satellite to within reach distance of the RMS. The WRU was developed by Grumman to support a potential on-orbit orbiter tile repair mission. During the development program, neutral buoyancy testing was performed in the NASA Johnson Space Center's Water Immersion Facility to validate the WRU design. The mission requirement has since been cancelled, but the WRU hardware is presently in storage at NASA Johnson Space Center

Unmanned retrieval of satellites within $\approx$ 1 km of the orbiter can be accomplished by a POM that is an adaptation (or outgrowth) of the MTV. Controlled by the crew in the SOC, the POM would be dispatched to capture the satellite and return it to within the reach distance of the RMS. The POM would be flown via TV (using essentially MTV equipment) to effect satellite capture by an RMS end-effector on an extendable boom mating to a compatible grapple fitting. TV visibility is needed only during the satellite capture phase; return to the SOC is via remote command/control from the SOC crew station. The POM could be designed to retrieve satellites of varying size/mass. It used a non-contaminating cold gas propulsion system that provides three axes of translation and rotation during free-flight and towing operations.

ALTERNATE PROXIMITY OPERATIONS EQUIPMENT

MANNED SATELLITE CAPTURE

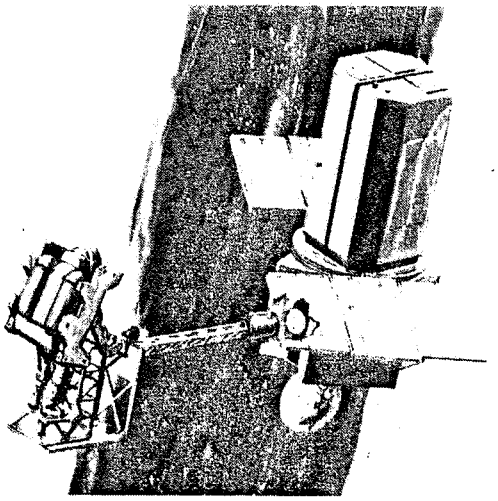

UNMANNED SATELLITE CAPTURE

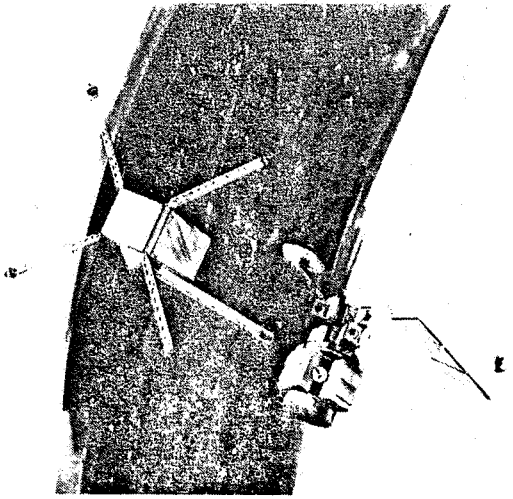

MANNED SATELLITE RETRIEVAL

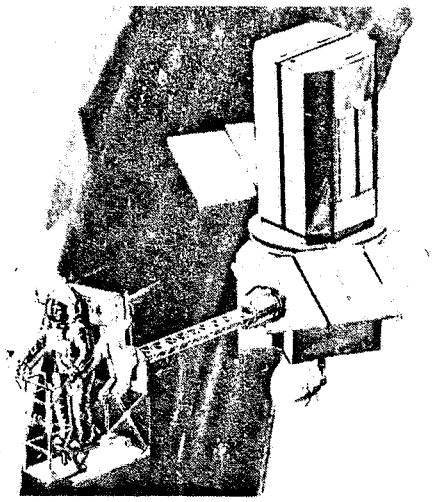

UNMANNED SATELLITE RETRIEVAL

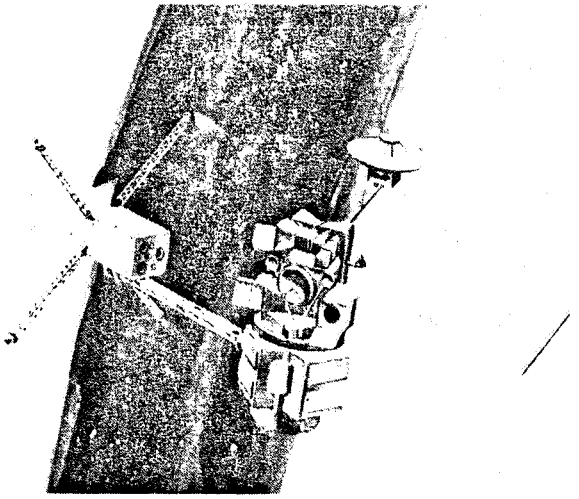

GRUMMAN

VERSATILE SERVICE STAGE (VSS)

A versatile service stage which is needed primarily for the transfer and return of satellites to/from higher energy LEO orbits is illustrated in the Figure.

The VSS is designed to operate with several front-end attachments to satisfy a wide assortment of mission needs. Included are a snare end effector on an extendible mast for grappling satellites rotating at higher rates than that accomplishable for docking, a docking/berthing system for attaching to compatible spacecraft, and manipulators that provide berthing to uncooperative or tumbling satellites and debris.

It is equipped with a high performance propulsion system for performing large delta-V maneuvers and a clean-firing cold gas propulsion system for satellite and SOC close proximity operations. An on-orbit refueling capability is also provided. The VSS is also equipped with TV systems for satellite examination.

VERSATILE SERVICE STAGE (VSS)

- NON-COOPERATIVE SATELLITE RETRIEVAL

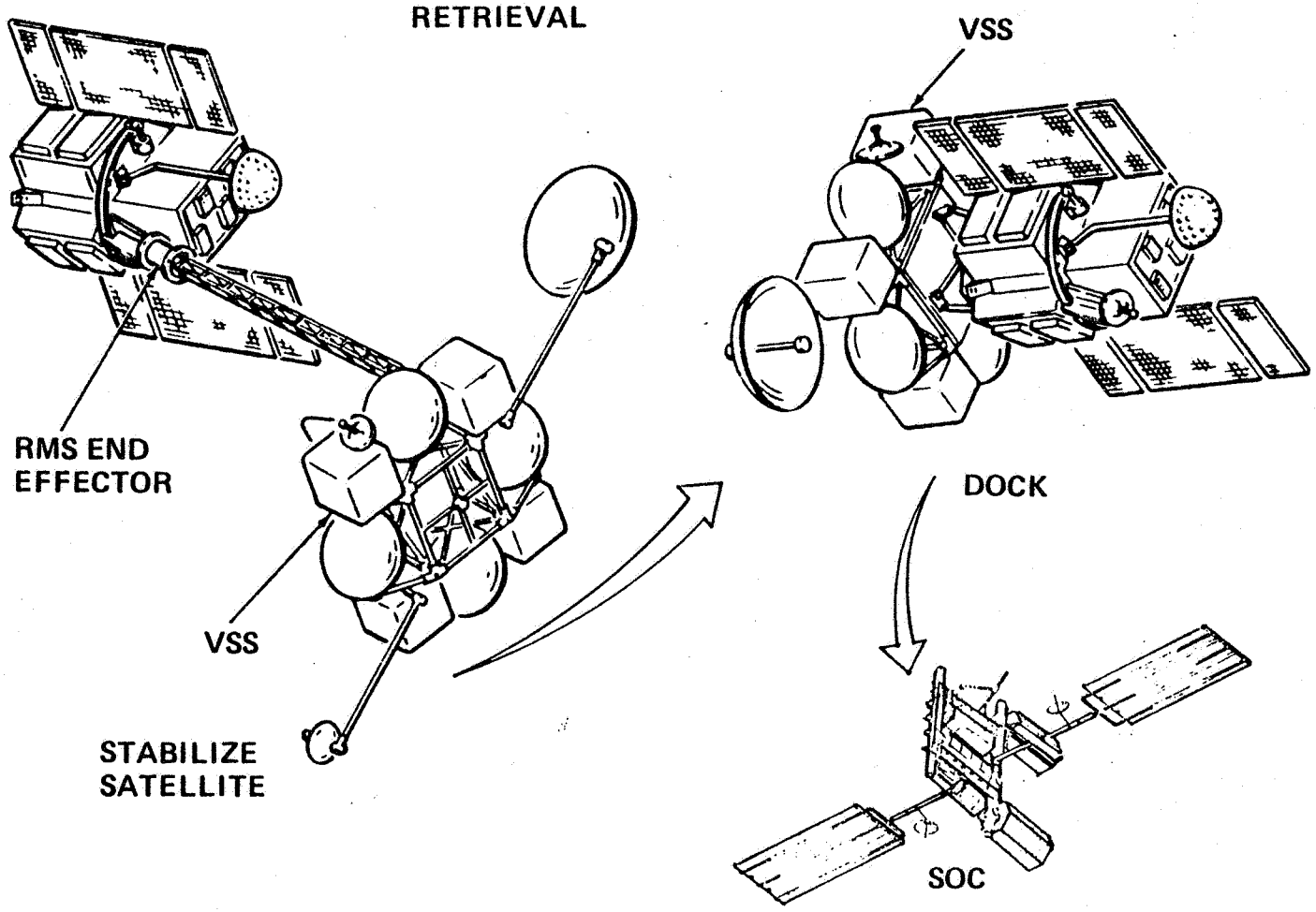

GRUMMAN

R81-2100-089W

VSS & MOTV PLANE CHANGE CAPABILITY FROM SOC WITH RETURN

A nomograph is presented which shows the payload capability of the MOTV core stage, and the versatile service stage (VSS) in terms of its ΔV capability to perform a given plane change from SOC and then return to SOC. Two cases are illustrated; one where the payload out and back are equal (i.e., round trip), and the other where the stage goes out alone to retrieve a satellite and then return with it to SOC. If an MOTV crew capsule plus general purpose mission equipment on one MMS module weighing around 8000 kg were brought round trip to a service site away from SOC then that site may not be more than 18 deg from SOC. If SOC is nominally at 28.5 deg then the MOTV core stage can perform plane change transfer to inclinations up to 46.5 deg and still return to SOC with its payload.

VSS & MOTV PLANE CHANGE CAPABILITY FROM SOC WITH RETURN

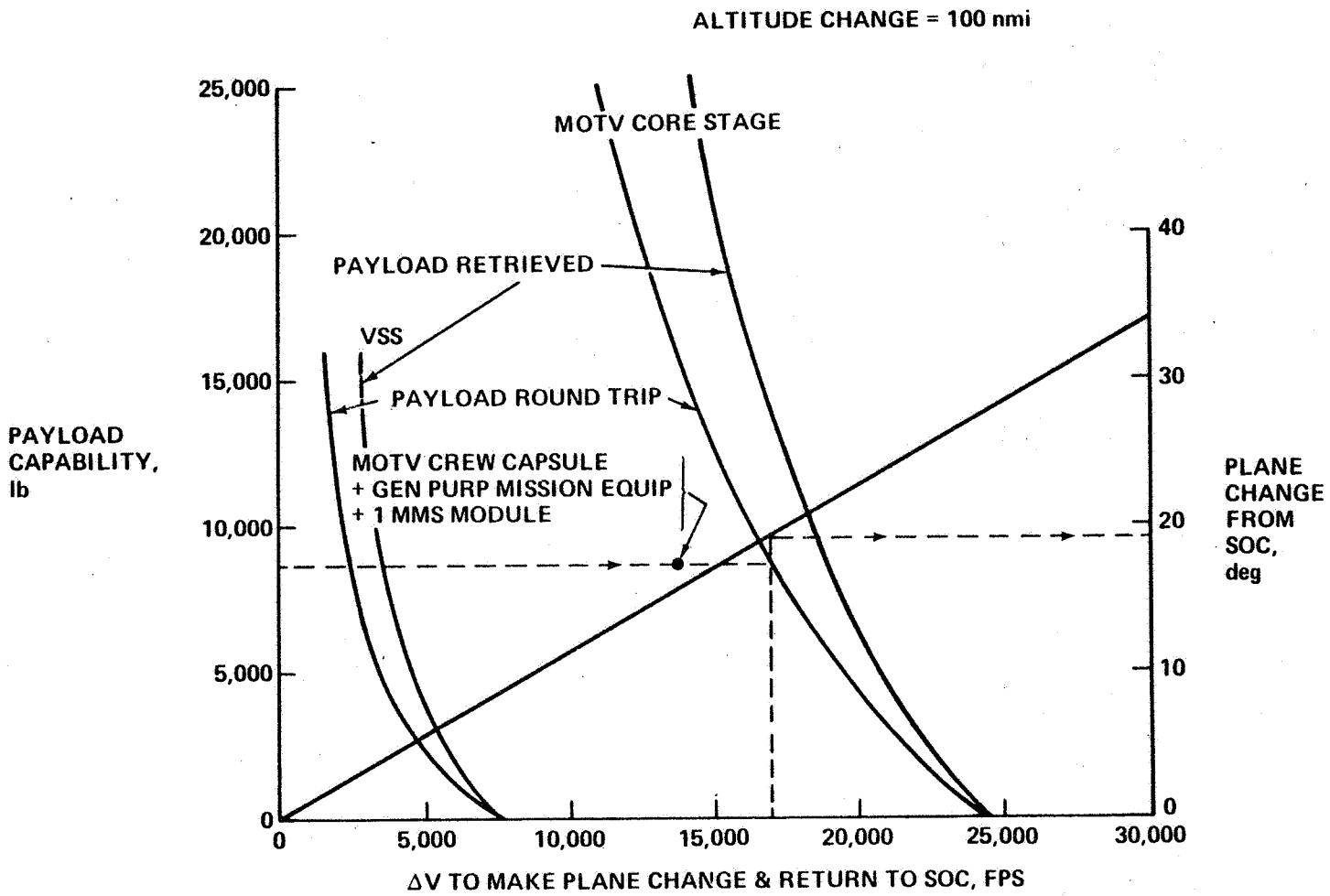

GRUMMAN

R81-2100-091W

AXAF SERVICE MISSION SCENARIO

The AXAF normally operates at 450 km altitude at 28.5° inclination. The scenario illustrated shows its retrieval by a versatile service stage (VSS), which originates from SOC, rendezvous with AXAF and brings it to SOC for scheduled on orbit service. After service and check out, the VSS returns the satellite to its operational orbit.

AXAF SERVICE MISSION SCENARIO

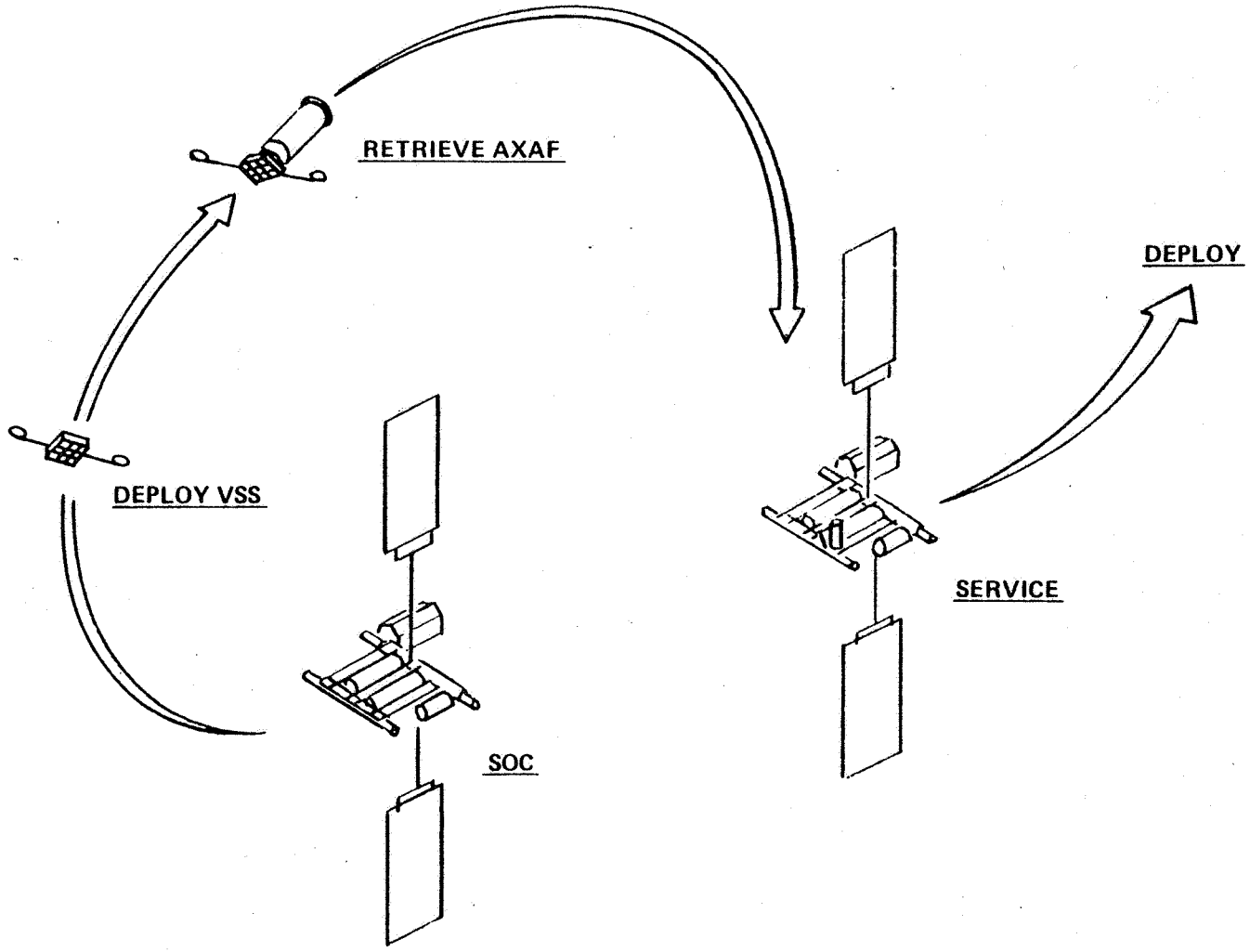

GRUMMAN

R81-2100-095W

OPERATIONAL SOC WITH SATELLITE SERVICING FACILITIES

Operational SOC configuration was used as the baseline configuration for satellite servicing operations. The tracks running around three sides of the two habitat modules are part of the basic configuration, as is the service modules with docking ports.

For satellite servicing operations, a 7.5-m extension pier is added to one arm of the SOC track system in the direction outboard of the docking module. A handling and positioning aid (HPA) is mounted on a truss structure at the tip of the pier. An end effector, suitable for the particular mission, attaches to the HPA tip. An OCP to hold an EVA crewman can be mounted on a track running along the HPA arm for a two-man satellite service operation. A mobile platform runs around the existing track system, as well as along the extension pier, to locate a twin manipulator system where required for the particular service mission. These manipulators are based on the RMS and one of them mounts an open cherry picker (OCP) at its tip, while the other mounts a standard mount snare end effector. The EVA crewman on the OCP controls both manipulator arms and the HPA, each in selective sequence. These facilities can also be controlled from a station in the SOC habitation module.

Unless self-propelled, free-flying satellites must be brought to SOC by a propulsion stage. It is necessary to service and refuel these propulsion stages. OTV/MOTV have their own service hangar but smaller propulsion stages, such as versatile service stage (VSS) and proximity operations module (POM), are used for closer-in retrieval. These require another facility which is located on the "underside" of the extension pier, as illustrated. A second HPA is mounted on a truss structure to handle VSS and POM. An OCP mounts to a track on the HPA arm and holds an EVA crewman who controls the HPA and thus, the servicing and refueling operations.

OPERATIONAL SOC WITH SATELLITE SERVICING FACILITIES

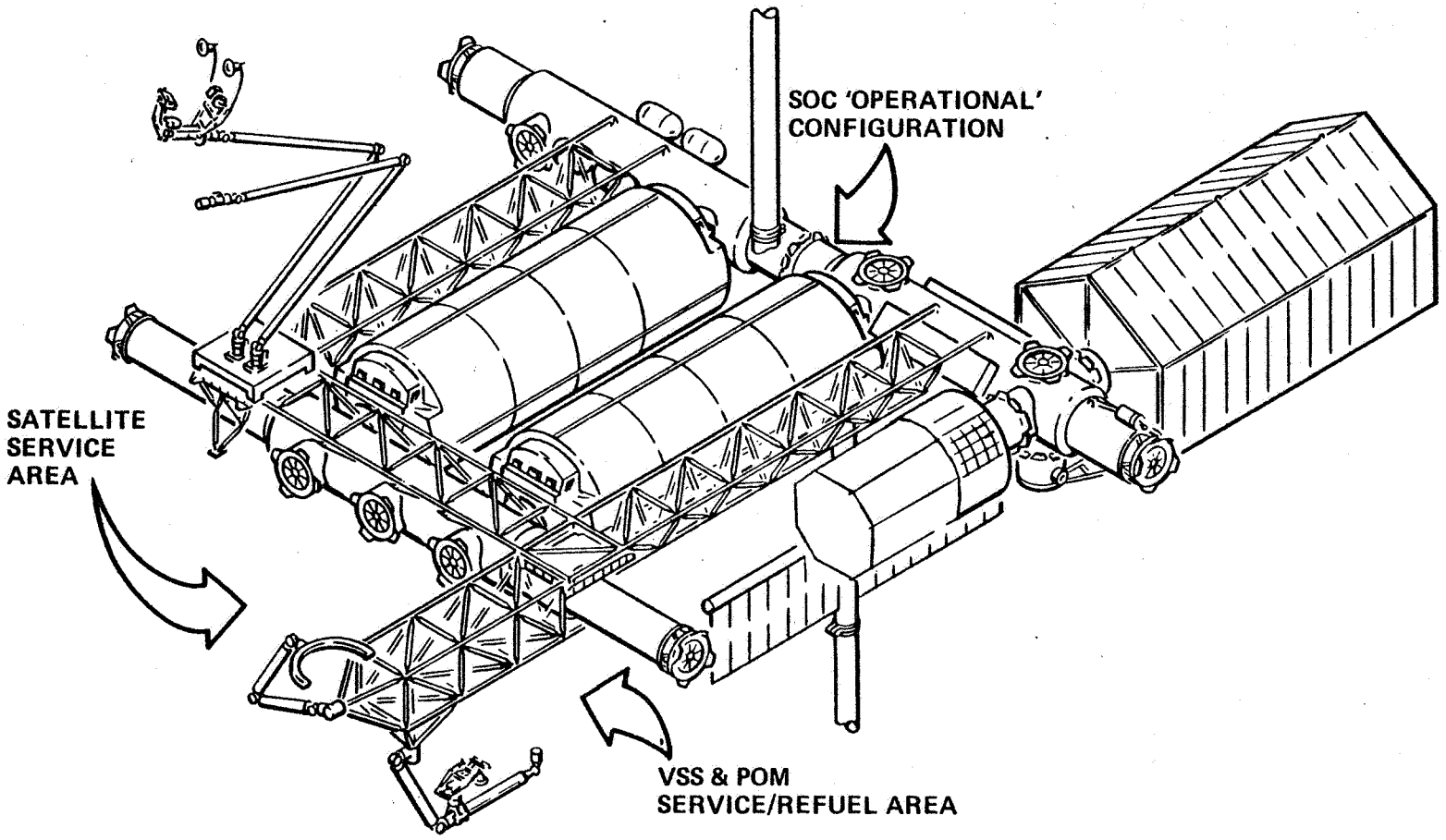

GRUMMAN

R81-2100-013W

AXAF CAPTURE & PREPARATION FOR SERVICE

The AXAF is a free flyer with no transfer propulsion of its own. A small SOC based propulsion stage, in this case a VSS, is sent to dock to the AXAF and bring it to SOC. The mobile platform is moved along the tracks to the tip of the extension pier. Then, controlled by the OCP/EVA crewman, the platform manipulator is maneuvered to capture the VSS/AXAF. The manipulator then transfers the VSS/AXAF to berth it to the end effector on the satellite service HPA. For this mission, the end effector has a yoke which holds the base of the AXAF. The propulsion service HPA is now moved to grasp the VSS with its end effector. This operation is controlled by an EVA crewman operating the OCP mounted to the HPA. Separation of AXAF and VSS now takes place at their docking interface.

AXAF – SATELLITE CAPTURE & PREPARATION FOR SERVICE

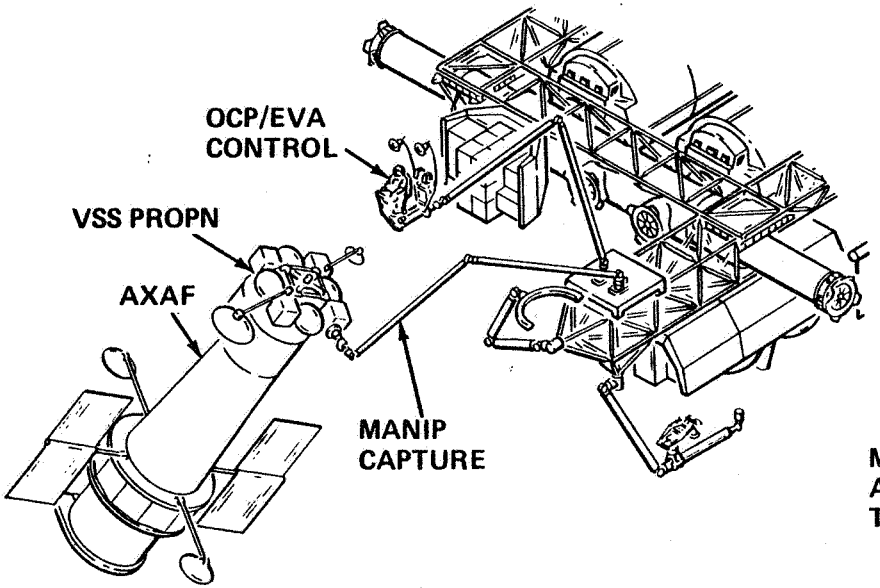

CAPTURE

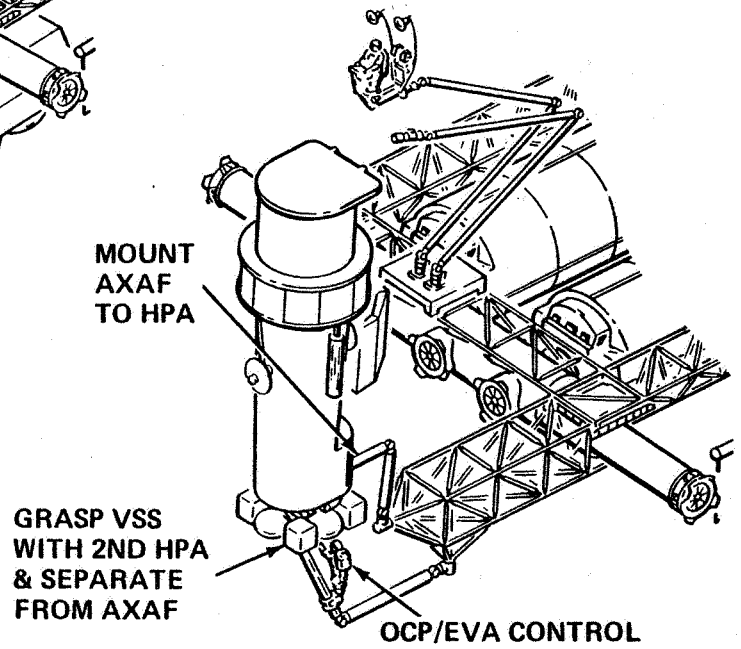

SERVICING PREPARATION

GRUMMAN

R81-2100-014W

SERVICING OPERATIONS AT SOC

The operational SOC configuration is shown opposite. The AXAF is berthed to a HPA and is being maintained by astronauts on OCP's. The HPA can position the AXAF as shown, or alternatively swing it 90° so that it is parallel with the SOC service modules, depending on accessibility requirements. AXAF subsystems are being serviced by a manipulator mounted OCP while the instruments are serviced at the same time from an OCP mounted on an HPA extension boom. An MTV is shown inspecting the far side of the AXAF, by transmitting TV to SOC. The VSS is also berthed to an HPA and components are being replaced by EVA OCP operations. In the background a POM has grappled a satellite and is transporting it to SOC for subsequent service operations. Note that the HPA's are mounted on a servicing pier and two logistic pallets with satellite replacement equipment are conveniently positioned to support the servicing operations.

SERVICING OPERATIONS AT SOC

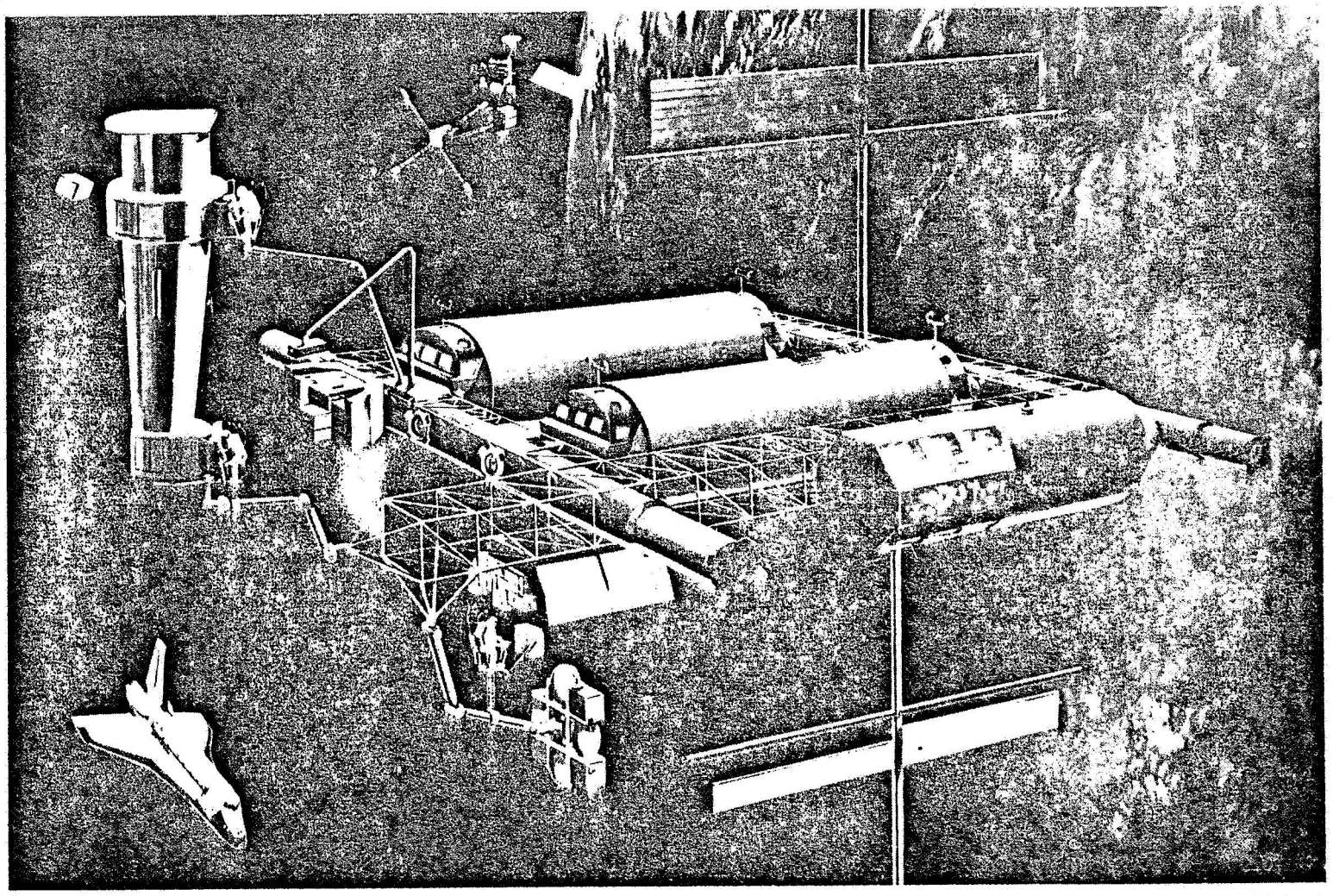

GRUMMAN

AXAF SATELLITE - SERVICE, CHECKOUT AND SEPARATION

Having demated the AXAF and VSS, the two bodies are moved to their respective service areas. The VSS is transferred, on its HPA mount, to the propulsion service area. There, it is served by an EVA crewman operating the OCP which has module handling arms. After servicing, the HPA transfers VSS to the refueling pallet where it mates to the fuel transfer umbilical.

While this servicing and refueling has been going on, the AXAF is rotated by the satellite service HPA to the "horizontal" position. Meanwhile, the Mobile Platform is moved along the SOC track from its satellite capture location, at the tip of the extension pier, to the location shown here. For a one man AXAF service operation, the EVA crewman locates his OCP so that he can service the subsystem area of the satellite, as shown. He also controls the second manipulator to fetch and carry change out modules from the services pallet. Having serviced the subsystems, the mobile platform is relocated so that the crewman can service the scientific instrument area in a similar manner. This last operation is not shown on this chart. Instead, a second crewman is shown as an alternate for servicing the instrument area from an OCP mounted to the HPA arm, much as the propulsion stage servicing is performed.

After servicing, VSS and AXAF are checked out and remated by berthing AXAF to VSS. The satellite service HPA is now withdrawn, leaving the mated bodies mounted on the propulsion HPA. This device locates the satellite for separation, final check out is performed, then separation from SOC.

AXAF SATELLITE SERVICE, CHECK OUT & SEPARATION

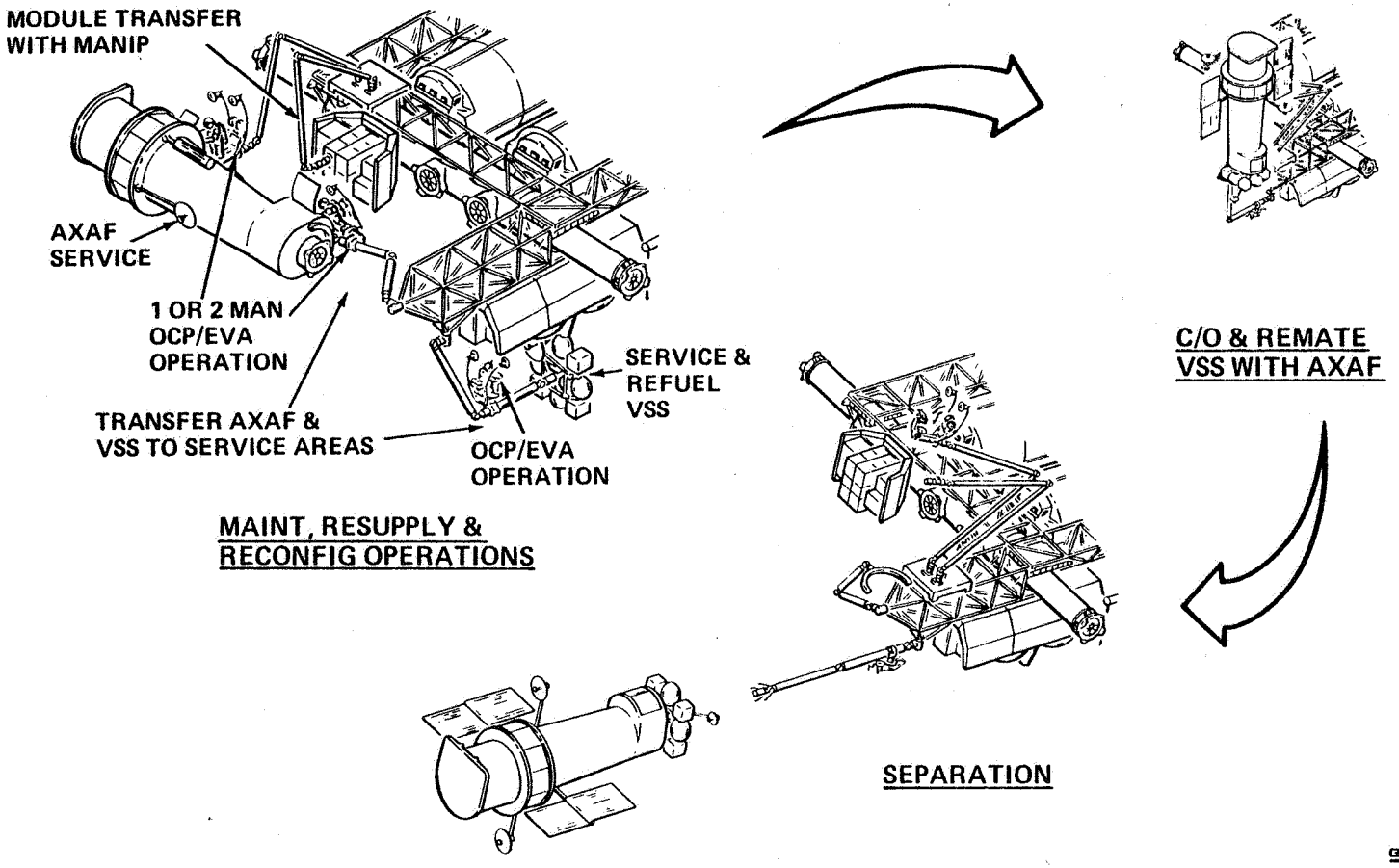

GRUMMAN

R81-2100-016W

TIME LINE - AXAF SERVICING FROM SOC

Replacement parts and consumables are delivered to SOC by orbiter logistic flights. These flights would occur on a regularly scheduled basis, meeting anticipated demands for satellite servicing operations and, therefore, would not impact plans for maintenance on any particular satellite.

The VSS is checked out, then sent to fetch the AXAF under control of the VSS POCC and bring it to SOC for maintenance. Twenty-four hour rendezvous time has been allowed each way since phasing could take considerable time. Three EVAs were judged sufficient to replace malfunctioning equipment. After the AXAF has been buttoned up, three and one-half hours are allocated for remote check out from the SOC operations room in conjunction with the AXAF POCC. Then the AXAF is mated to a VSS for subsequent redeployment. Time for redeployment is approximately one-quarter of that for retrieval because phasing is not a factor. The time for nominal AXAF service operations is six and one-half days. This could easily be extended if problems developed during servicing. A contingency time of one day has been allocated.

TIMELINE – AXAF SERVICING FROM SOC

ORBITER LAUNCH, RNDZ & UNLOAD EQMT AT SOC

VSS RENDEZVOUS & DOCK TO AXAF

VSS/AXAF TRANSFER TO SOC

SEPARATE VSS & REFUEL

MAINTAIN AXAF

MATE & DEPLOY VSS/AXAF

BOOST AXAF TO OPS ALTITUDE

VSS RETURN TO SOC

REFUEL VSS

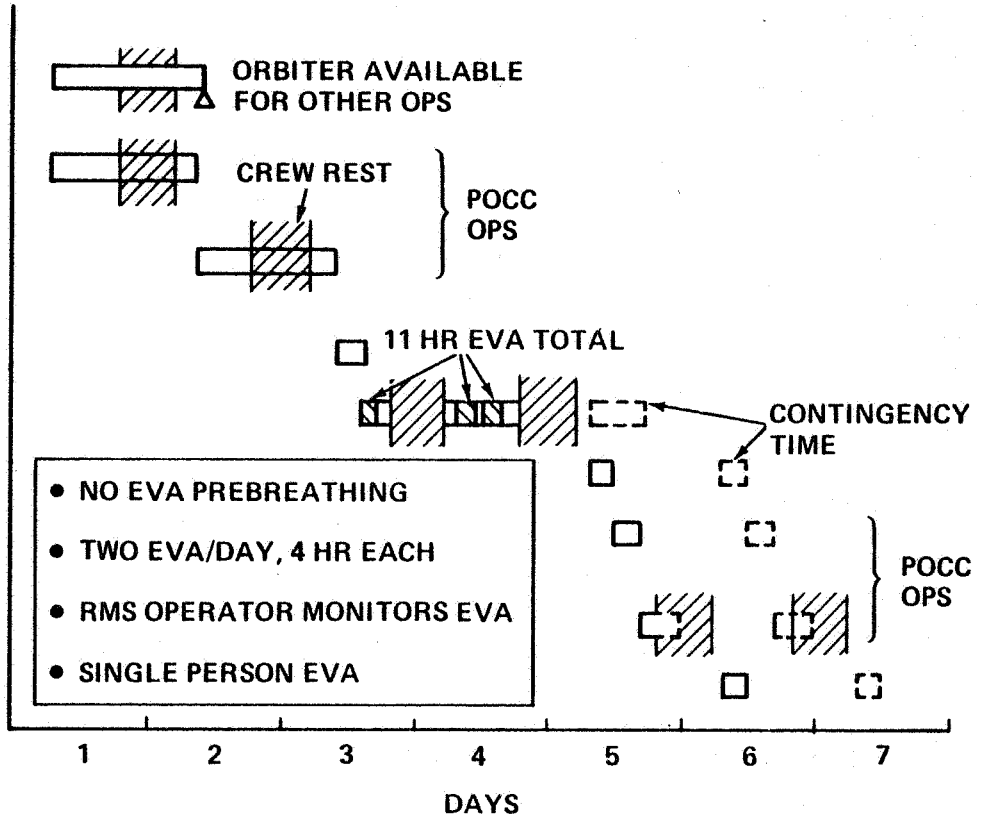

GRUMMAN

AXAF MAINTENANCE FUNCTIONS

Functional analysis of AXAF on-orbit maintenance operations was performed as illustrated. Subfunctions of the operational functions shown in the figure were determined and task times were assigned to each of the subfunctions, then summed, to establish the time listed to perform each amintenance function.

AXAF MAINTENANCE TASKS

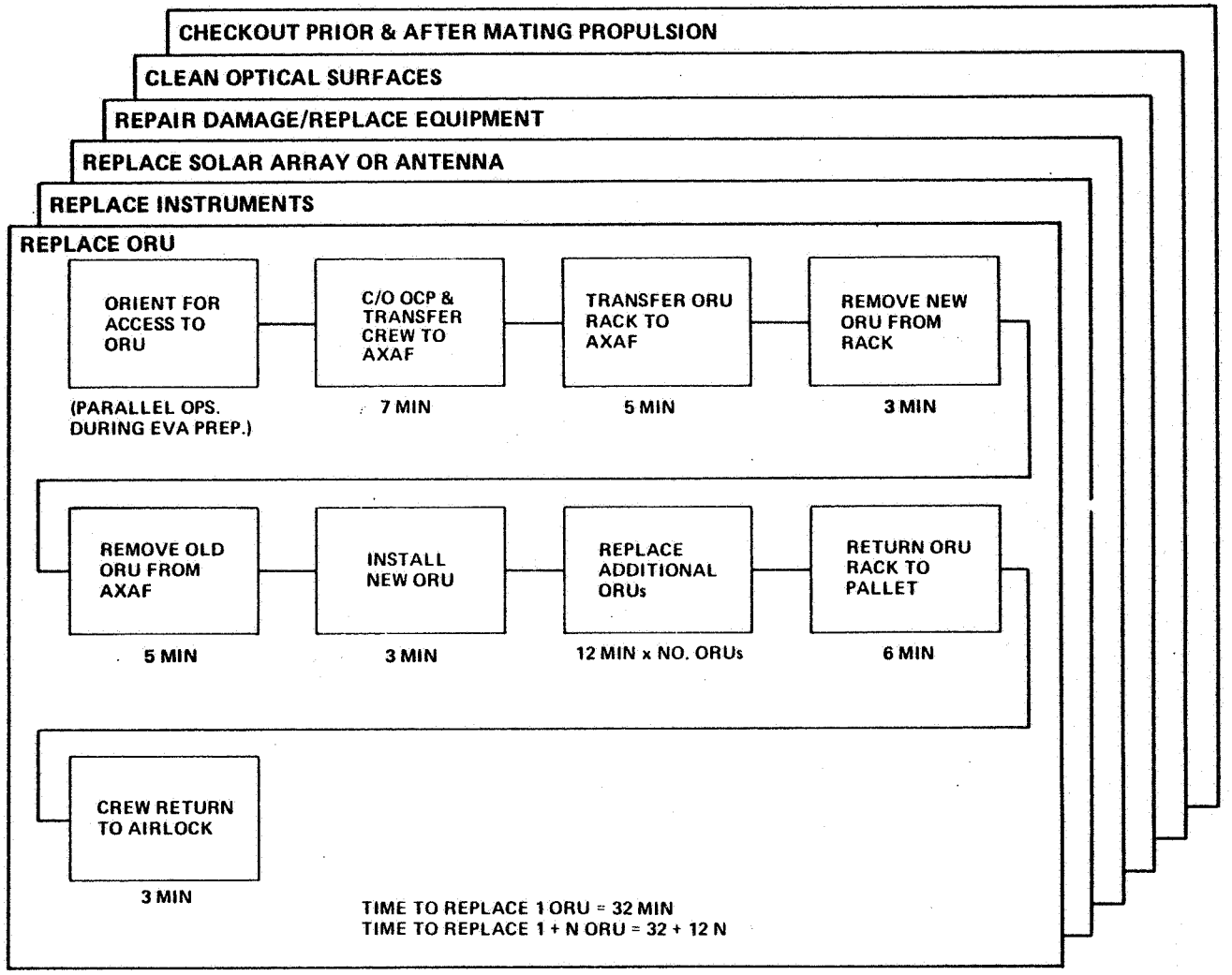

GRUMMAN

TIME TO REPLACE COMPONENT VS TASK DIFFICULTY

Contingency time allowance adequate for satellites designed for space repair may be inadequate for satellites not designed for in-flight maintenance. The figure shows the likely increase in time required to change-out a component in an spacecraft not designed for maintenance. Ground simulation tests with a suited astronaut established the time to change one MMS module. Time to remove an LDEF try was similarly estimated from ground tests. Although the LDEF trays were not designed for in-flight maintenance, the bolts are accessible for removal. The next task time that was evaluated consists of replacing a component which is behind a ground service access panel. The task here is to cut away a thermal shield, then remove the panel bolts to provide access to the malfunctioning component. This component is attached with four accessible bolts and has one electrical connector to be removed. The time to replace this component, including taping the thermal shield in place, is five times that required to replace an MMS module. The most difficult task shown in the figure repeats the work just described but two of the four bolts are in a location blind to the suited astronaut. While this task would be easy for ground operations (the EMU helmet limits access and visibility) it would be very difficult for space suit operations even with ground simulation training. The astronaut would have to rely on feel to remove and reinstall two bolts. Consequently, this task is estimated to take 10 times as long as the MMS module replacement.

TIME TO REPLACE COMPONENT VS TASK DIFFICULTY

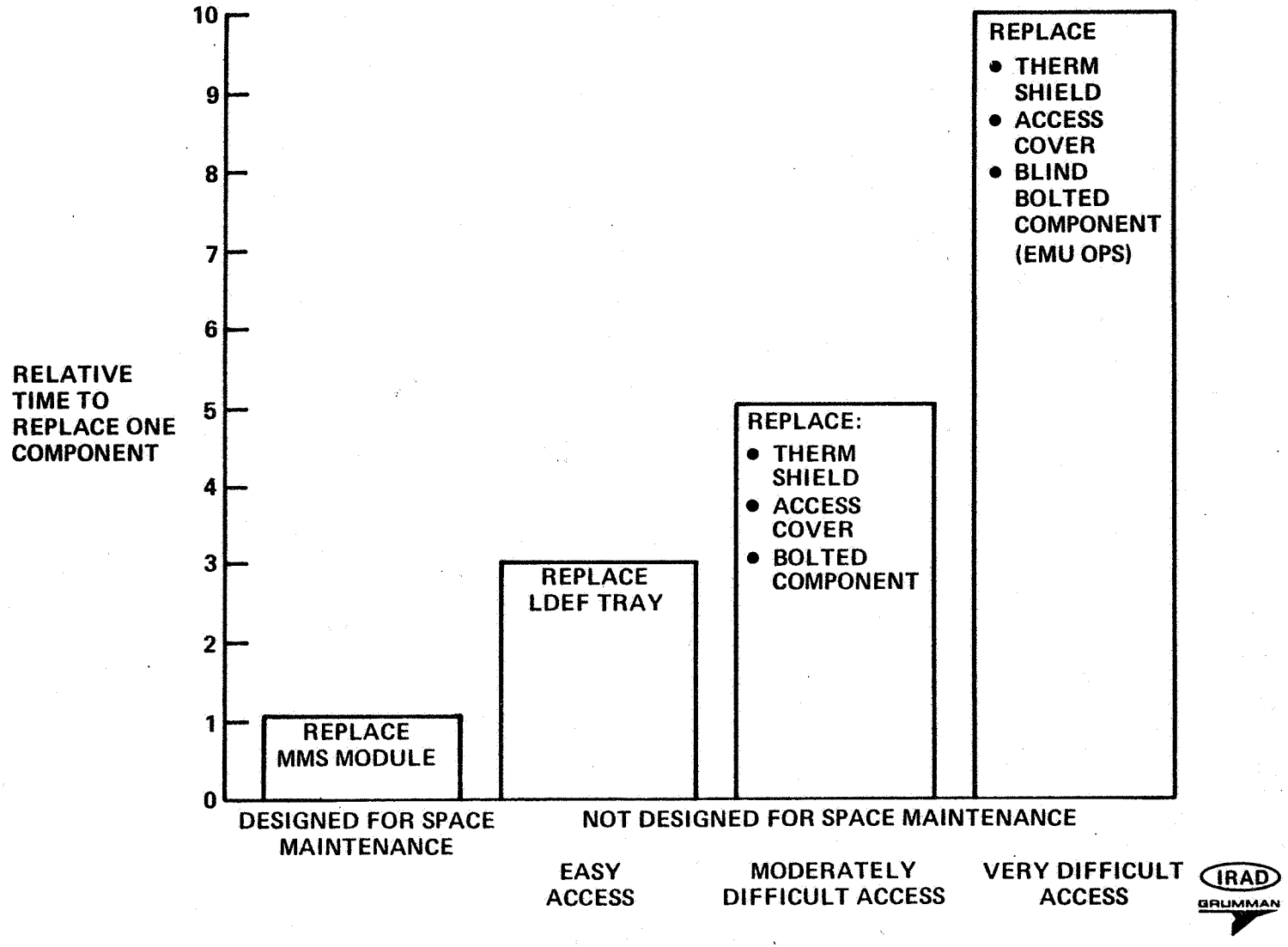

R81-2100-40W

AXAF SERVICING BY ORBITER

After the orbiter is inserted into orbit, it immediately commences rendezvous with the AXAF which will have decayed from its initial operational orbit of 500 km. When the orbiter is in close proximity to the AXAF, the POM will be launched from orbiter, maneuvered to the AXAF, grapple it, and then transfer the AXAF to the orbiter for berthing on the HPA. The POM will maneuver the AXAF to the HPA berthing mechanism where the HPA completes the operation by latching onto the AXAF.

For nominal operations the work is performed serially at each work area. To shorten the maintenance time, work can proceed in parallel at two levels as illustrated in the figure. After completing AXAF maintenance, the orbiter transfers to 500 km, checks out the AXAF and deploys it.

AXAF SERVICING BY ORBITER

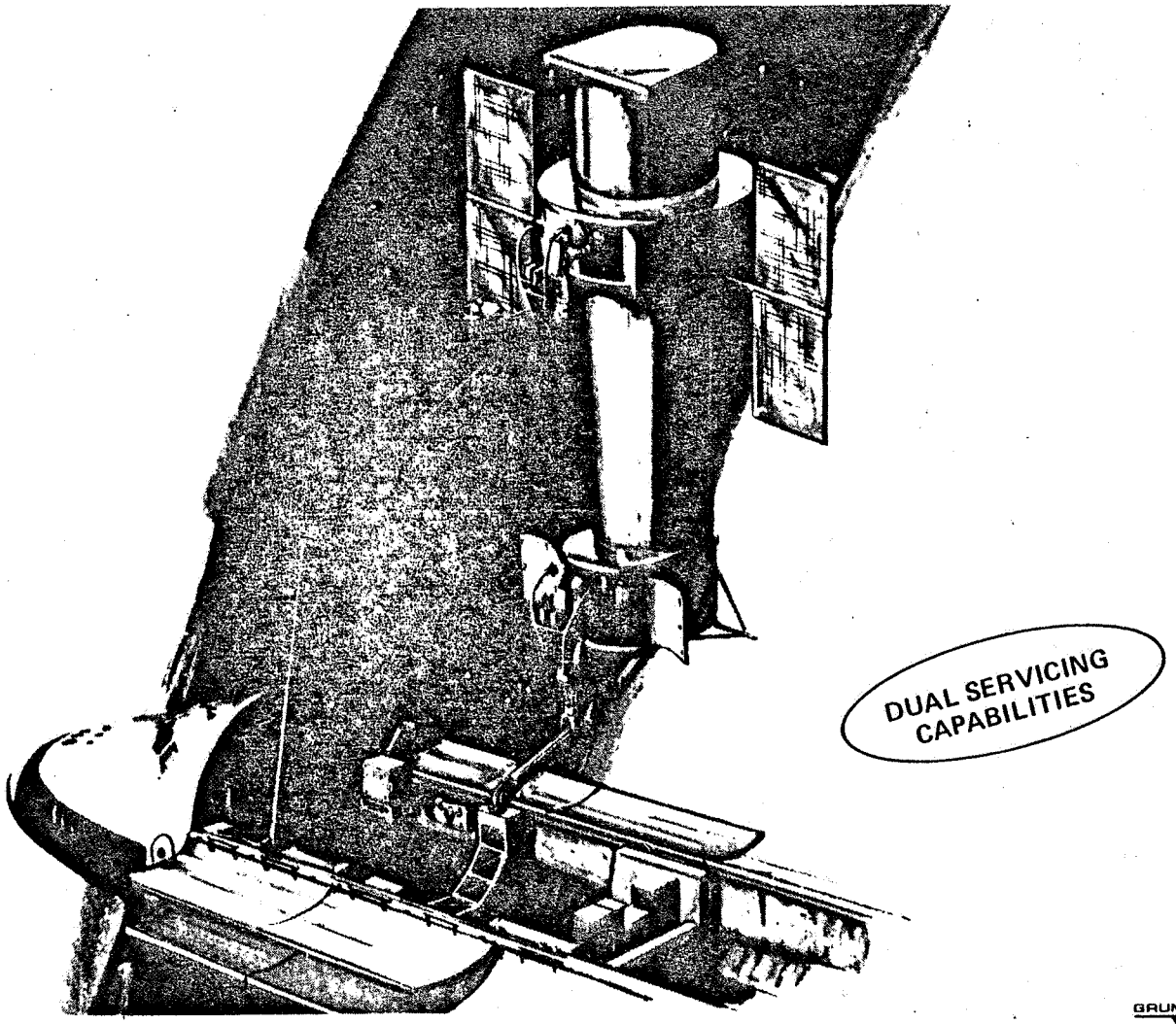

GRUMMAN

COMPARISON OF COMMUNICATIONS PLATFORM ASSEMBLY AND CHECKOUT FROM SOC AND ORBITER

Comparative data of communication platform assembly and checkout from SOC and orbiter is shown opposite. Two orbiter flights are required when SOC is not used, increasing time on orbit and generating increased costs to transport equipment to orbit.

COMPARISON OF AXAF SERVICING FROM SOC AND ORBITER

MISSION PARAMETER	SOC	ORBITER	COMMENTS
NUMBER OF ORBITER FLIGHTS	1	1	AXAF REPLACEMENT EQUIP. & VSS PROP. DELIVERED TO SOC BY SHARED LOGISTIC FLIGHT
MISSION TIME IN DAYS	5½	4	AXAF/SOC OPERATIONS (ORBITER SHARED LOGISTICS FLIGHT NOT INCLUDED)
NO. CREW (AXAF WORKERS)	2	2	SINGLE SHIFT
CREW WORK TIME (HR) (AXAF RELATED)	18	21	INCLUDES ORBITER BOOST OF AXAF TO OPERATING ALTITUDE
EVA TIME (HR)	11	11	
COSTS MILLION (1981 DOLLARS)	$7.4	$24.7	ORBITER RESUPPLY FLT TO SOC COSTS INCLUDED
CONTINGENCY $ MILLION (1981 DOLLARS)	$0.03	$ 0.7	ONE DAY WITH 2 EVAs

GEO COMMUNICATION PLATFORM LAUNCHED BY SOC

The folded GEO communication platform completely fills the orbiter payload bay and may require a dedicated flight to deliver it to SOC. It is unloaded from the orbiter cargo bay and supported by an HPA during unfolding operations. After checkout, an orbital transfer vehicle (OTV) that is based on SOC is mated to the GEO Platform, interfaces verified, and then released for transfer to geostationary orbit.

GEO COMMUNICATIONS PLATFORM LAUNCHED BY SOC

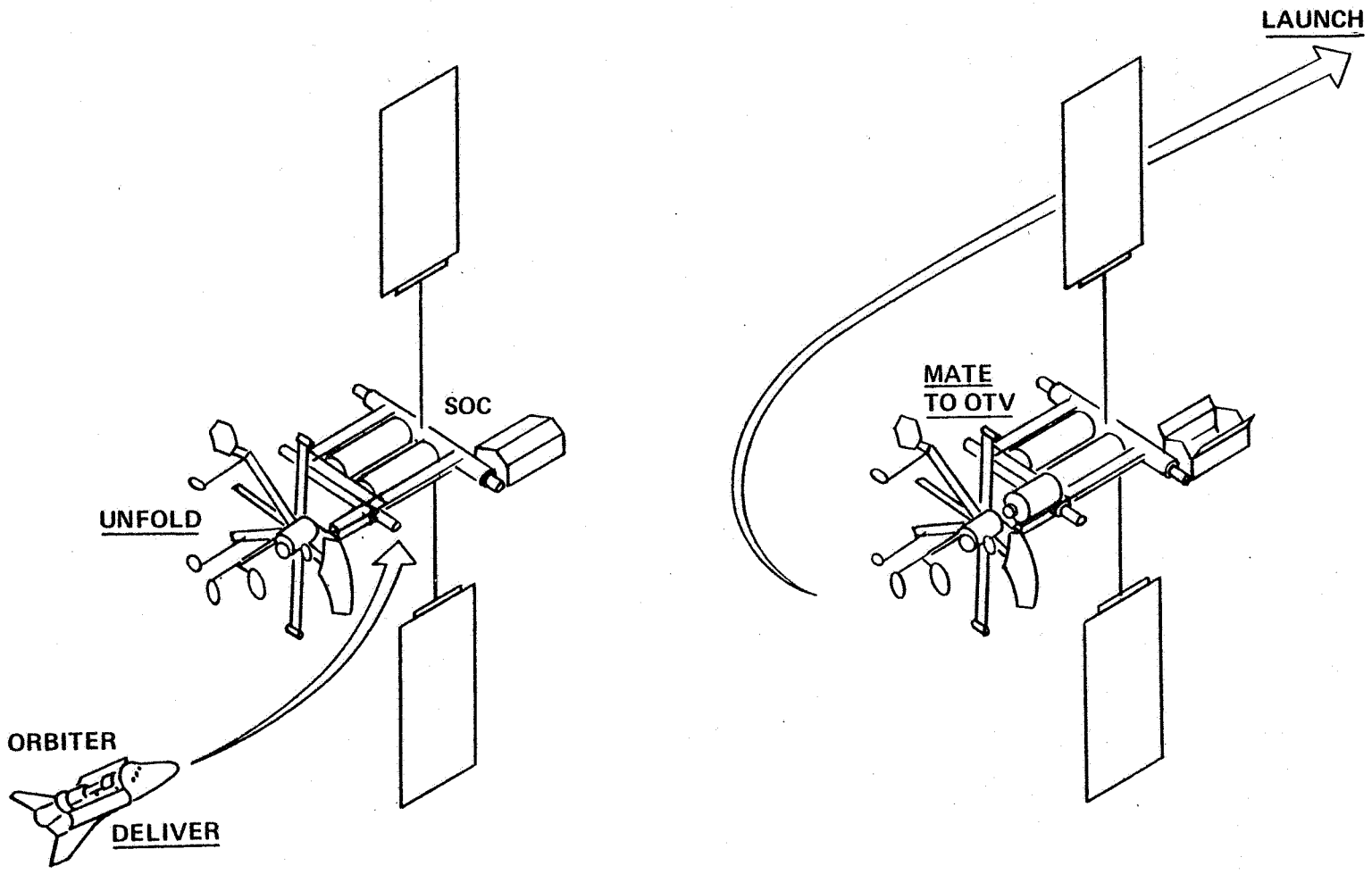

GRUMMAN

R81-2100-042 W

GEO COMMUNICATION PLATFORM LAUNCH - DELIVERY AND UNFOLDING

The next two charts define a scenario for the preparation of a communications platform to be launched from SOC to geosynchronous orbit. The first step is transfer of the packaged platform from the orbiter to its mounting location on SOC. A mobile platform manipulator provides the muscle to transfer the package from the orbiter and berth it to the satellite servicing HPA. The HPA then articulates to move the platform to its preferred location for the deployment of appendages. Some are deployed automatically while other may require assistance from an EVA crewman operating from the mobile platform OCP. The platform can be rotated on its HPA to bring each radial appendage arm within reach of the EVA/OCP.

GEO COMM PLATFORM LAUNCH – DELIVERY & UNFOLDING

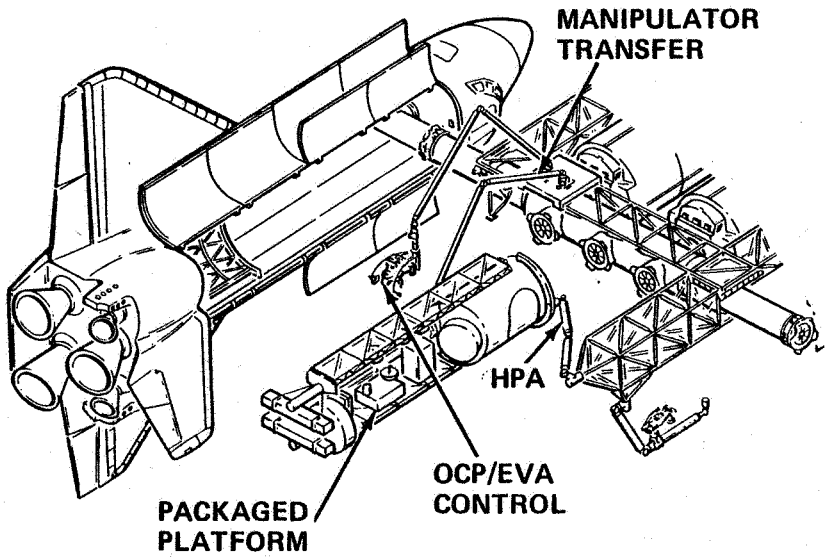

UNLOAD & BERTH PAYLOAD

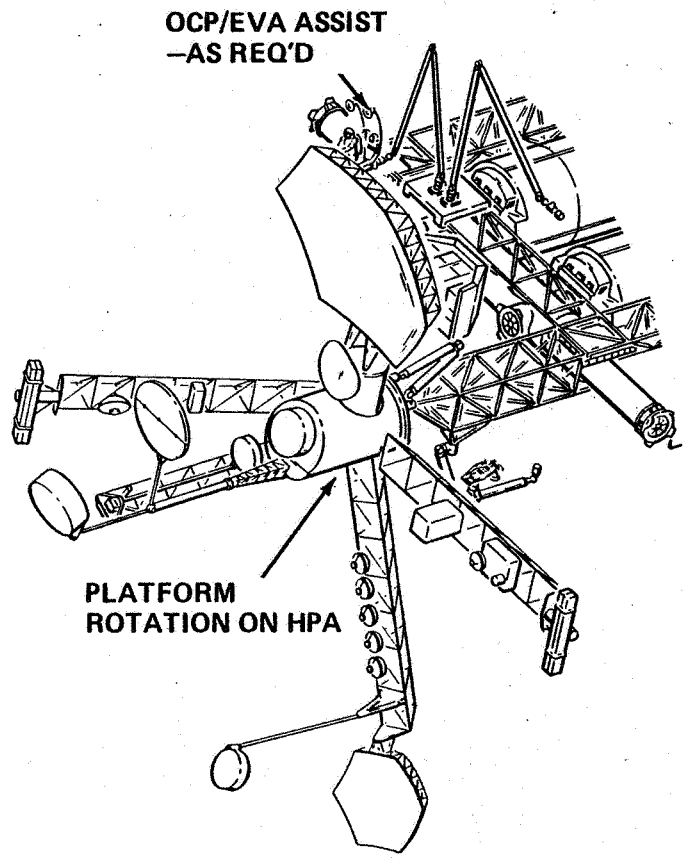

UNFOLDING APPENDAGE

GRUMMAN

GEO COMMUNICATION PLATFORM LAUNCH - CHECK-OUT AND MATE TO OTV

In this mission scenario, appendages are unfolded automatically. However, there may be a hangup in one of these automatic deployments. To handle this problem, the HPA can tilt to provide OCP/EVA man access to a problem area.

When all appendages have been deployed satisfactorily, the antennas are calibrated utilizing an MTV RF signal source and the whole system checked out. An OTV will transfer the platform to geosynchronous orbit. The carriage mounted OTV has first been serviced in its hangar and refueled, put on the track system and run along to the tip of the SOC extension pier. The satellite servicing HPA, controlled by the OCP/EVA man, now berths the platform to the OTV. After final check out, the platform/OTV is separated from SOC. The method of separation will be determined when ground rules governing the burning of "dirty" RCS, separation and approach corridors, etc., have been established.

GEO COMM PLATFORM LAUNCH – CHECKOUT, MATE TO OTV

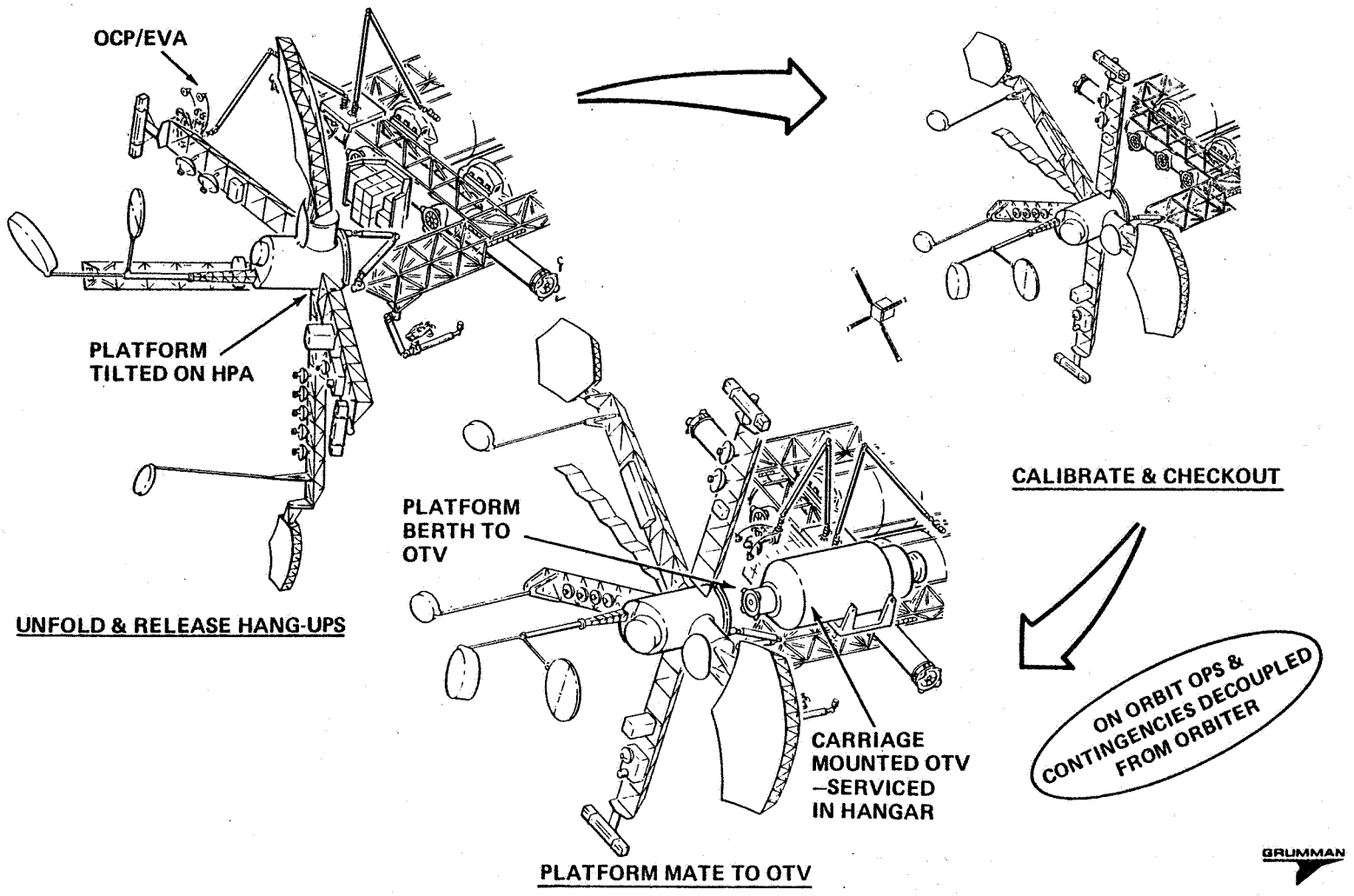

GRUMMAN

R81-2100-001W

TIMELINE - GEO COMMUNICATIONS PLATFORM LAUNCHED FROM SOC

The bar chart allows 27 hours for orbiter rendezvous with SOC and unloading of the GEO platform. After emptying the cargo bay, the orbiter is ready for other operations. The orbiter could be loaded with debris or a satellite that requires earth refurbishment. Next, the platform is unfolded and a calibration MTV launched for determining antenna patterns. The major portion of the time (forty four and one-half hours) shown in the figure is required to obtain the antenna patterns. The antenna pattern data is obtained during around-the-clock operations for 40 hours. Two crew members alternate 12 hours on and 12 hours off to control test operations. Only 3 additional hours are required to mate the Platform to the OTV, check interfaces, and deploy it. If the OTV was based on earth, then another orbiter logistics flight would be required.

TIMELINE – GEO COMMUNICATIONS PLATFORM LAUNCHED FROM SOC

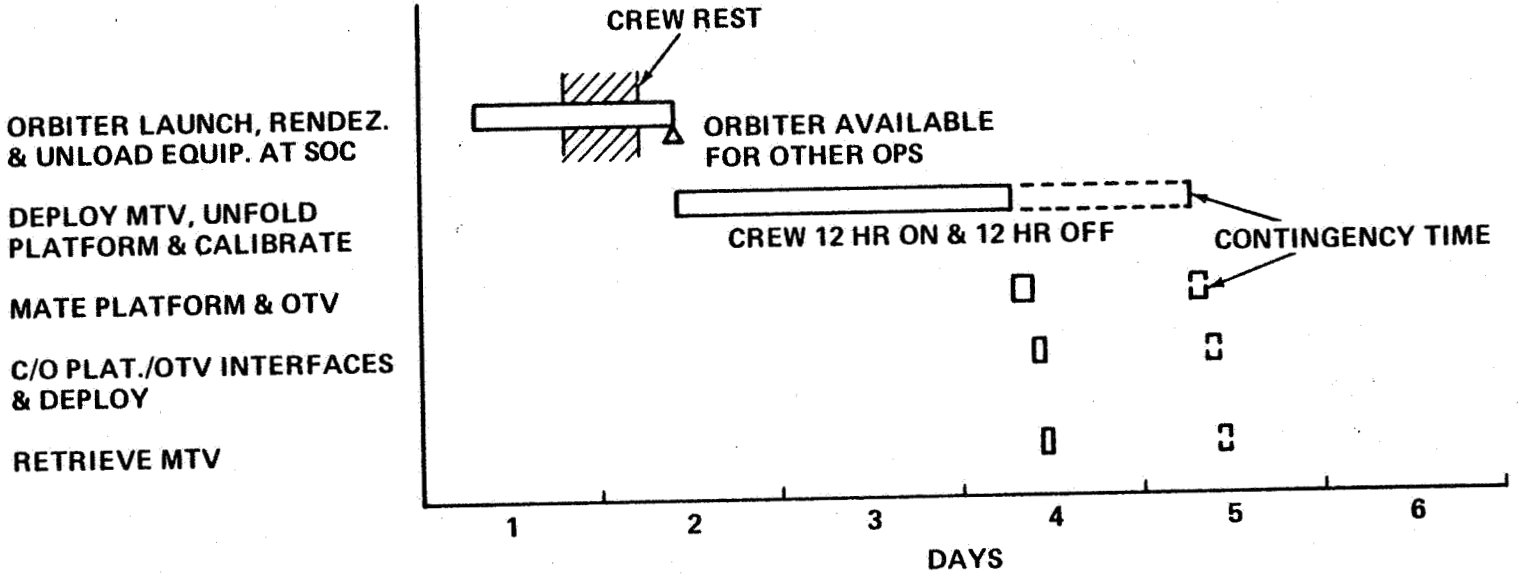

GEO COMMUNICATIONS PLATFORM LAUNCHED BY ORBITER

The GEO communications platform is placed in low earth orbit by an orbiter, and attitude stabilized for later retrieval.

The second Orbiter transports the OTV to orbit and rendezvous with the communications platform. Next the RMS grapples the platform and berths it to the HPA. Now the communication platform unfolding is controlled from the Orbiter aft flight deck. In the event that appendages do not deploy completely, EVA operation will rectify the situation. Platform checkout operations are similar to those described for SOC, i.e., the calibration MTV is released and antennae patterns determined. The figure shows the OTV erected out of the cargo bay so that the platform can be assembled to it. After interfaces are verified and the OTV check out, the OTV is released for subsequent transfer to geosynchronous orbit. The last event to be accomplished prior to orbiter release is the retrieval and stowage of the calibration MTV.

GEO COMM PLATFORM LAUNCHED BY ORBITER

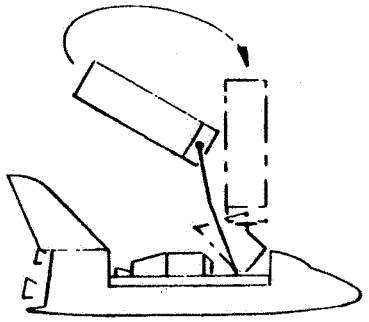

STS 2 CAPTURE PLATFORM

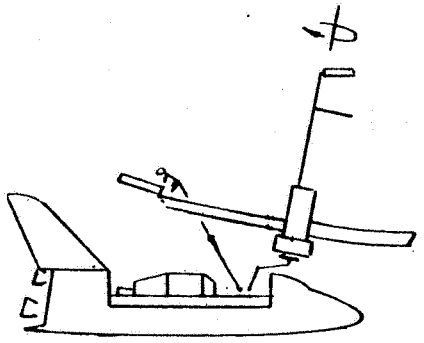

UNFOLD APPENDAGES

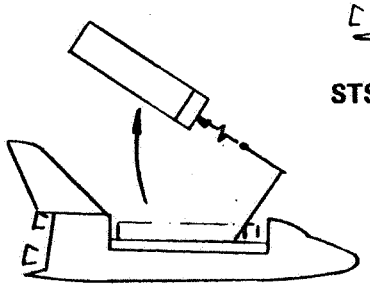

STS 1 DEPLOY PACKAGED PLATFORM

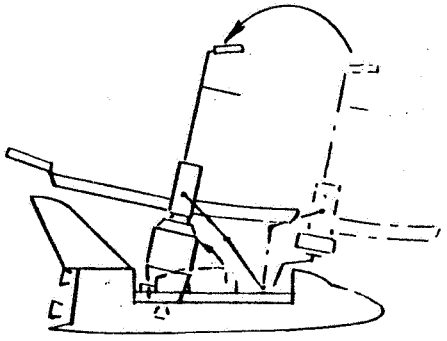

MOUNT PLATFORM ON OTV

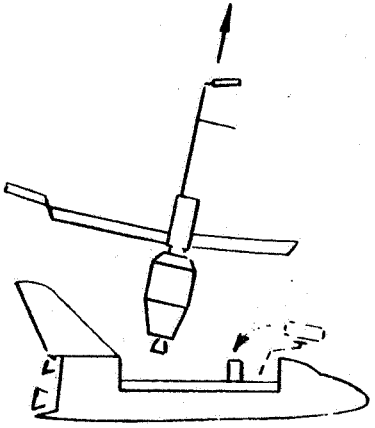

RELEASE S/C

GRUMMAN

COMPARISON OF AXAF SERVICING FROM SOC AND ORBITER

Comparative data of AXAF servicing from the SOC and orbiter is shown opposite. All parameters compared are quite similar, except costs for the planned operations and cost allowance for contingencies. The significant cost driver is the cost associated with transportation of equipment to orbit.

COMPARISON OF COMMUNICATION PLATFORM ASSEMBLY AND CHECKOUT FROM SOC AND ORBITER

MISSION PARAMETER	SOC	ORBITER	COMMENTS
NUMBER OF ORBITER FLIGHTS	1	2	SOC FUEL FOR OTV SCAVENGED FROM ET ON PREVIOUS ORBITER FLIGHTS
MISSION TIME IN DAYS	2½	4	
NO. CREW (PLATFORM WORKERS)	2	2	ONE PERSON/SHIFT
CREW WORK TIME (HR) (PLATFORM RELATED)	49½	54½	SOC UNLOADING PLATFORM FROM ORBITER INCLUDED
EVA TIME (HR)	0	0	ALL OPERATIONS PERFORMED REMOTELY
COSTS MILLION (1981 DOLLARS)	$31.4	$61.5	
CONTINGENCY MILLION (1981 DOLLARS)	$ 0.01	$ 0.4	ONE DAY OPERATIONS

GRUMMAN

REPRESENTATIVE MISSION SERVICE COSTS

Increased costs when servicing the AXAF from orbiter without utilizing SOC, and launching the communication platform, are illustrated in the figure The reason the Orbiter transportation costs associated with the AXAF (13.5 + 5.6 = $19.1 million 1981 constant dollars) are high is that the HPA, AXAF replaceable equipment, POM, and OMS kit require a payload bay length factor of 0.67.

A similar comparison of the communications platform costs are shown in the figure. The orbiter transportation costs of $57.7 million (1981 constant dollars) includes two flights, with full cargo bays on each flight. The SOC transportation cost of $29.8 million (1981 constant dollars) is the orbiter flight that transports the communications platform to SOC.

REPRESENTATIVE MISSION SERVICE COSTS (1981 CONSTANT $)

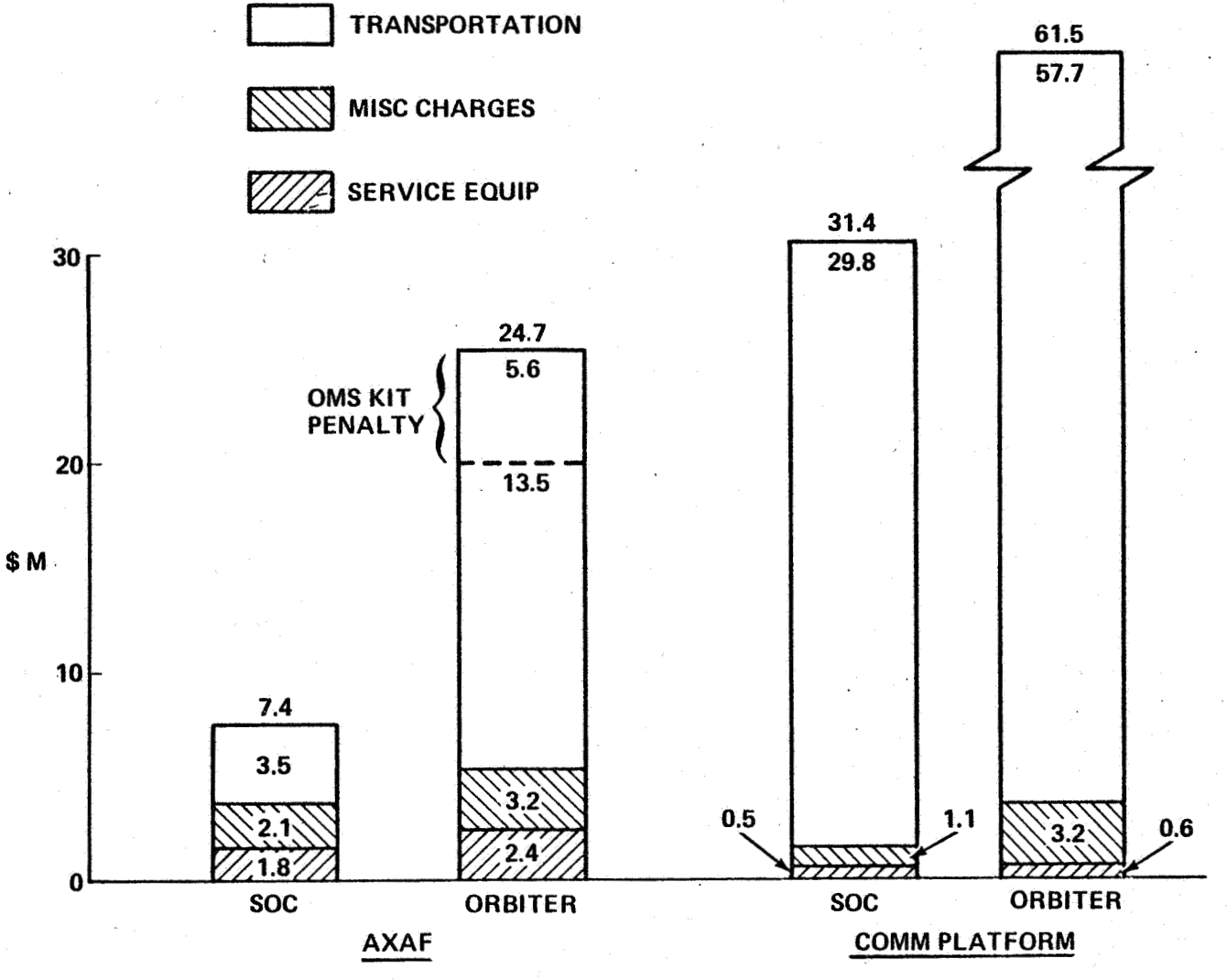

R81-2100-038

SATELLITE SERVICING ANALYSIS

- SATELLITE SERVICING REQUIREMENTS & APPROACHES
  - SOC OPERATIONAL SERVICING REQMTS
  - AXAF ON-ORBIT SERVICE MISSION
  - GEO PLATFORM LAUNCH MISSION
- CONSTRUCTION & SATELLITE SERVICE EQUIPMENT REQUIREMENTS
  - COMMONALITY OF REQMTS
  - GENERAL PURPOSE EQUIPMENTS
- SERVICING MISSION NEEDS & BENEFITS
  - SATELLITE SERVICING NEEDS
  - SOC BENEFITS

GRUMMAN

R81-2100-184B

ANALYSIS OF CONSTRUCTION AND SERVICE EQUIPMENT REQUIREMENTS

There were four main objectives to this task:

- To identify common requirements and equipments for implementing satellite service missions and construction missions, based on equipment concepts defined in three earlier studies and on the servicing requirements established in the preceding task. The three earlier studies were the LMSC and GAC analyses of satellite servicing from the orbiter, and Boeing's previous SOC systems analysis study.
- To analyze these requirements and equipments for maximum commonality and utility
- To provide updated equipment lists
- To define the evolutionary growth of servicing and construction capabilities through the first 10 years of SOC operations.

ANALYSIS OF CONSTRUCTION & SERVICE EQUIPMENT REQUIREMENTS

- OBJECTIVES
  - IDENTIFY COMMON REQUIREMENTS & EQUIPMENTS FOR SATELLITE SERVICE MISSIONS & CONSTRUCTION MISSIONS
  - DEVELOP A PLAN TO MAXIMIZE COMMONALITY & UTILITY OF EQUIPMENTS
  - UPDATE EQUIPMENT LISTS
  - DEFINE EVOLUTIONARY GROWTH OF SERVICING & CONSTRUCTION CAPABILITIES THRU FIRST 10 YEARS OF SOC

GRUMMAN

SATELLITE SERVICING EQUIPMENT LISTINGS

From the reference mission scenarios used to define servicing requirements in the preceding task, a listing of necessary satellite servicing main equipments was drawn up. An extract from this listing is shown here. Some of the equipments were also identified in the SOC main study and in the GAC and LMSC satellite service studies; this is noted in the listing. The technology status of these equipments is also noted.

Further listings were made as indicated in this chart. These listings are presented in the final report and they cover the following categories: "Required flight support equipment" identifies flight equipments necessary to support servicing of the two reference satellites; "potential use" lists those equipments identified in the earlier studies which are not considered necessary for the reference missions but have potential as general purpose equipments for servicing satellites. The remainder of these earlier study listings were considered to have no obvious use for SOC based servicing since they were needed primarily for orbiter based servicing. These were listed as "other equipments".

SATELLITE SERVICING EQUIPMENT LISTINGS

OTHER EQMTS PREVIOUSLY IDENTIFIED

'POTENTIAL USE' FLIGHT SUPPORT EQMT

'POTENTIAL USE' SAT SERVICE EQMT

REQD FLIGHT SUPPORT EQMT

REQD SAT. SERVICE EQMT – REFERENCE SAT. SERVICE MISSIONS

EQUIPMENT	WHERE IDENTIFIED				TECH STATUS
	SOC EXTN STUDY	SOC MAIN STUDY	LOCKH'D SAT. SERV	GRUMMAN SAT. SERV	
• MOBILE PLATFORM ASSY					
– PLATFORM CARRIAGE	✓				NEW
– STS MANIPULATORS	✓		✓	✓	EXISTING
– END EFFECTORS	✓	✓	✓		DEVLT/NEW
– OPEN CHERRY PICKER (OCP)	✓	✓	✓	✓	DEVLT
• AIRLOCK	✓		✓		SOC STD EQMT
• EMU	✓	✓	✓		EXISTING
• HANDLING & POSITIONING AID (HPA) ASSY					
– HPA STRUCT/MECHMS	✓			✓	
– END EFFECTORS	✓				
– OCP SUPPORT BOOM	✓				

GRUMMAN

R81-2100-148B

CONSTRUCTION EQUIPMENT - COMMONALITY WITH SATELLITE SERVICE EQUIPMENT

Construction equipments, as identified in the SOC main study, were listed. They were then compared to the "required equipments" and the "potential use equipments" listed for satellite servicing. Some construction equipments had no equivalent requirements in satellite servicing and were identified as such. Others were identical or similar to equipments required for satellite servicing. For each of the "similar equipments" in this category, the comparable piece of satellite servicing equipment was identified. Also identified in this chart is construction equipment which also appears as "potential use" equipment in the satellite servicing listing.

CONSTRUCTION EQUIPMENT - COMMONALITY WITH SAT. SERVICE EQUIPMENT

CONSTR EQUIPMENT - DEFINED IN MAIN STUDY	NO. SAT SERVICE EQUIV IDENTIFIED	REQUIRED FOR SAT. SERVICE		IDENTIFIED AS 'POTENTIAL USE' FOR SAT. SERVICE	COMPARABLE SAT. SERVICE EQMT – WHERE APPLICABLE
		IDENTICAL EQMT	SIMILAR EQMT		
• MOBILE CHERRY PICKER			√		MOBILE PLATFORM
• HANDLING TOOLS			√		END EFFECTORS
• PORTABLE EVA WORK STN				√	
• EMU		√			
• STD HAND TOOLS		√			
• MANIPULATOR SYS			√		MOBILE PLATFORM FUNCTION
• ARTICULATED CONSTR FIXTURE			√		HPA
• MODULAR CONSTR FIXTURE	√				
• TURNTABLE/TILTTABLE			√		HPA FUNCTION
• CONSTR UMBILICAL SYS			√		HPA FUNCTION
• BEAM BUILDER SYS					
• STRUT ASSY AID					

GRUMMAN

R81-2100-158B

CONSTRUCTION VS SATELLITE SERVICE EQUIPMENTS SUMMARY

This chart summarizes the commonality comparison of construction equipments with satellite service equipments. Twenty-one pieces of construction equipment were identified in the SOC main study, fifteen of which had comparable satellite servicing functions. Considering these fifteen pieces of comparable equipment, nine of them were identical to satellite servicing equipments, either as "required" or as "potential use", and could be used directly. The remaining six comparable equipments had functions similar to satellite servicing and were, therefore, investigated further to assess the impacts of using common equipments.

CONSTRUCTION VS SATELLITE SERVICE EQMT SUMMARY

- 21 EQMTS DEFINED FOR CONSTRUCTION MISSIONS
- 15 OF 21 EQUIPTS HAVE COMPARABLE SAT. SERVICE FUNCTIONS
- SUMMARY OF THESE EQMTS:–

IDENTICAL TO SAT SERV EQMT

- PORTABLE EVA STN
- EMU
- STD HAND TOOLS
- TAPE DISPENSER
- DATA RECORDER
- TETHERS
- DATA BUS TEST MODULE
- ELECTRICAL CONTINUITY TESTER
- OTV & EQMTS

9

SIMILAR TO SAT SERV EQMT

- MOBILE CHERRY PICKER
- HANDLING TOOLS
- MANIPULATOR SYS
- TURNTABLE/TILT TABLE
- ARTICULATED CONSTR FIXTURE
- UMBILICAL SYS

6

- IDENTICAL EQMTS – USE DIRECTLY
- SIMILAR EQMTS – ASSESS COMMONALITY IMPACT

GRUMMAN

SIMILAR EQUIPMENTS - MOBILE CHERRY PICKER AND MOBILE PLATFORM

The Mobile Cherry Picker is a new piece of construction equipment with 18 m total reach. At its tip, it can mount an open cherry picker (OCP) which, in turn, can mount a payload handling tool. The whole is mounted on a carriage to run along the SOC track.

For satellite servicing, two STS manipulators are mounted on a similar carriage to provide a mobile platform. One manipulator mounts an OCP at its tip while the other manipulator mounts an appropriate end effector. Two manipulator arms are provided which allow the crewman on the OCP to control both arms, yet position himself to watch and control the handling of the payload by the other arm from a suitable but safe location. This is of particular significance when, for example, capturing a free flying satellite prior to berthing. There is also operational flexibility in the two arm system; the second manipulator arm, for example, can fetch and carry change-out modules for the crewman working from the OCP.

Questions of reach, degrees of freedom and load handling capabilities are discussed in the final report.

Payload handling tools require a "small object" and "large object" tool for construction work. If proven to be suitable, these tools can be adapted to attach to the STS manipulator snare end effector for satellite servicing.

SIMILAR EQUIPMENTS – MOBILE CHERRY PICKER AND MOBILE PLATFORM

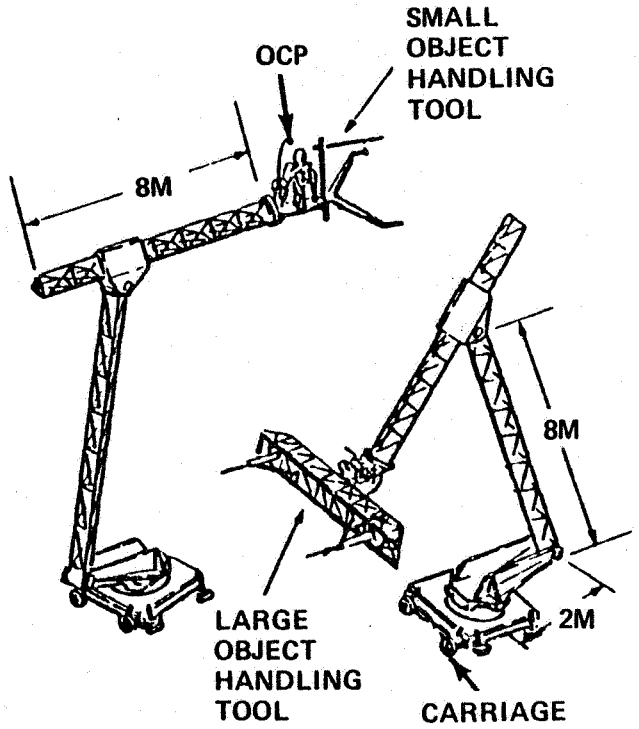

MOBILE CHERRY PICKER
(CONSTR. MISSN REQMT)

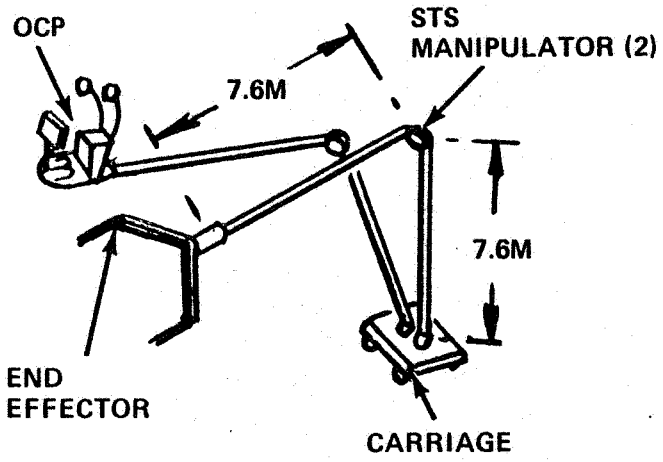

MOBILE PLATFORM
(SAT. SERV MISSN CAPABILITY)

GRUMMAN

R81-2100-151B

SIMILAR EQUIPMENTS - MANIPULATOR SYSTEMS

The manipulator system for construction missions is used for build-up and operations of the Initial SOC. It comprises a manipulator mounted to a turntable which is mounted in turn to a berthing ring. The manipulator is defined as being based on the orbiter RMS configuration.

Since the manipulators for the satellite servicing mobile platform are also based on the orbiter RMS, this piece of equipment can be used directly. The handling and positioning aid (HPA) has the capability of turning and, although elaborate for the function, it could be used as a turntable. The berthing ring is standard. Therefore, a manipulator system, which is assembled from satellite servicing equipment, can be provided for construction activities.

SIMILAR EQUIPMENTS – MANIPULATOR SYSTEMS

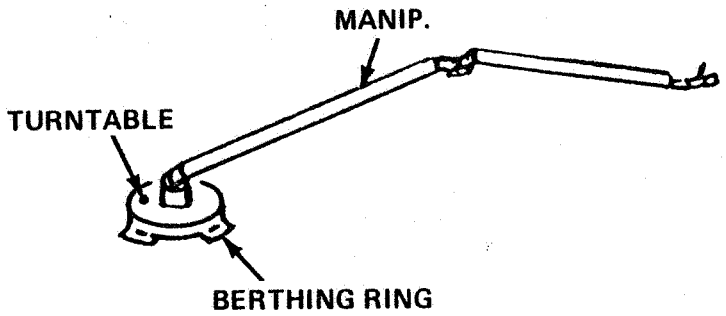

MANIPULATOR SYS
(CONSTR. MISSION REQMT)

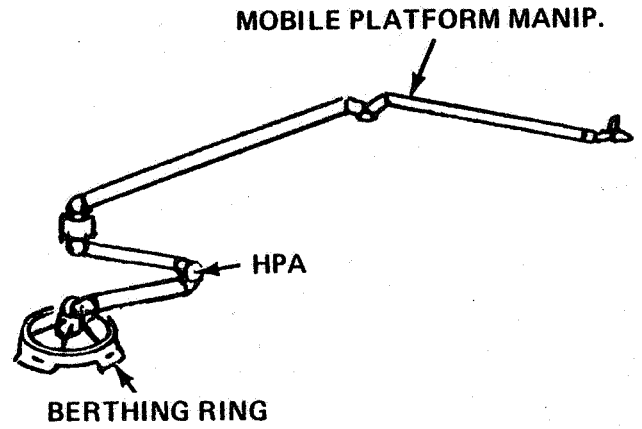

MANIPULATOR SYS
(SAT. SERVICE EQUIPT. CAPABILITY)

GRUMMAN

R81-2100-152B

SIMILAR EQUIPMENTS - TURNTABLE/TILT TABLE AND HPA

The primary objective of the turntable/tilt table is to re-orient a workpiece for accessibility by a cherrypicker or an EVA crewman. The HPA, presently being developed for orbiter operations, has the same objectives and provides similar degrees of freedom.

SIMILAR EQUIPMENTS – TURNTABLE/TILTTABLE AND HPA

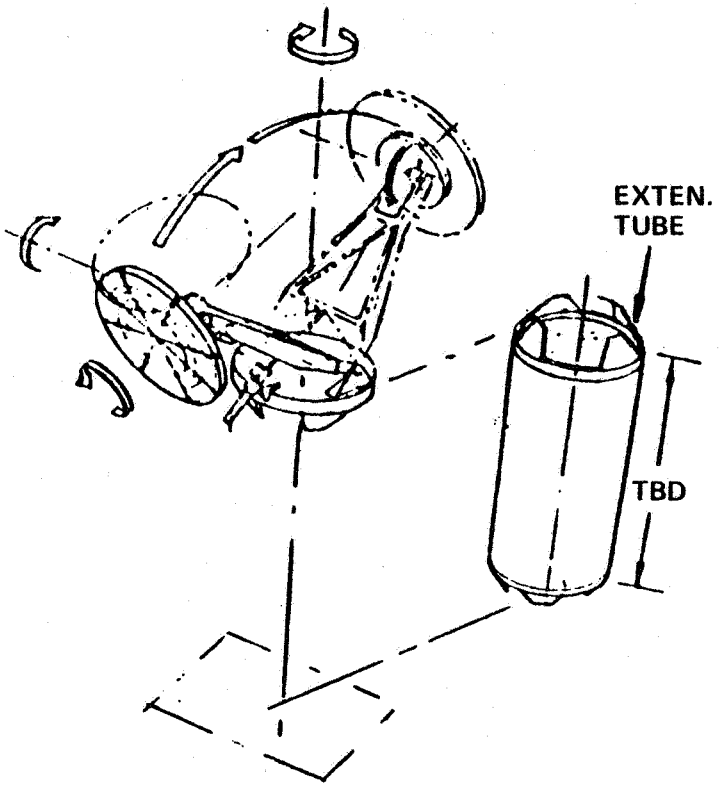

TURNTABLE/TILT TABLE
(CONSTR. MISSION REQMT)

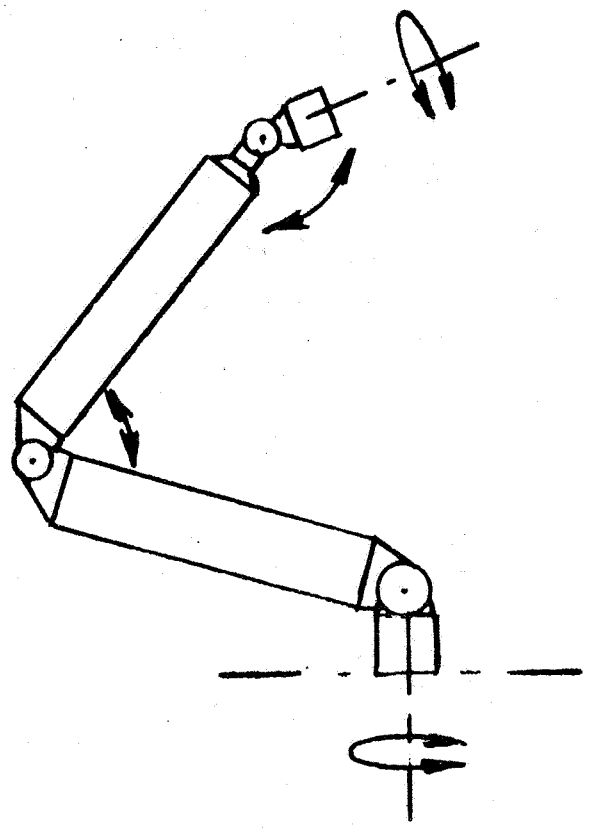

HANDLING & POSITIONING AID
–BASIC CONFIGURATION
(SAT. SERVICE CAPABILITY)

GRUMMAN

SIMILAR EQUIPMENTS - ARTICULATED CONSTRUCTION FIXTURE AND HPA

The articulated construction fixture is required to provide the support and positioning interface between the workpiece and the SOC. It has an articulating arm mounted to the turntable/tilt table and has a payload attachment grapple fixture at its tip. The HPA, under development for the orbiter and used for satellite servicing, offers similar articulations and can, with suitable interface, mount the same grapple fitting at its tip. Questions of reach, degrees of freedom, and load handling capabilities are discussed in the final report.

SIMILAR EQUIPMENTS – ARTICULATED CONSTRUCTION FIXTURE AND HPA

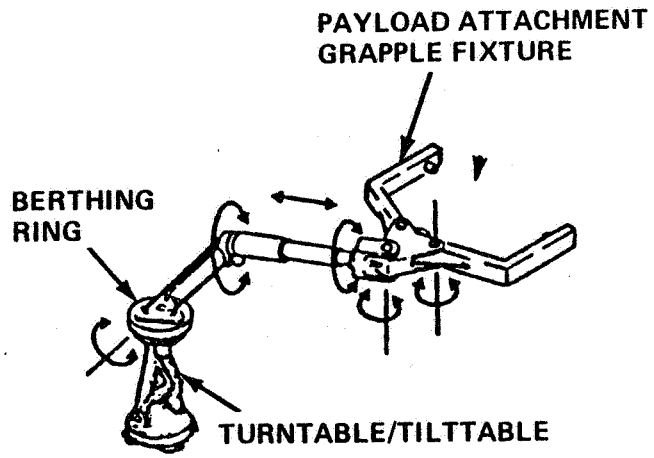

ARTICULATED CONSTR FIXTURE
(CONSTR. MISSION REQMT)

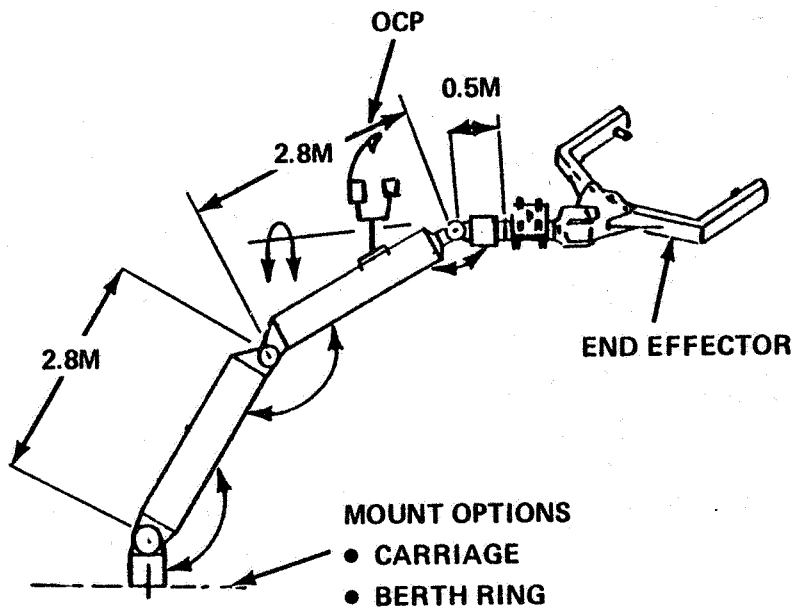

MOUNT OPTIONS
- CARRIAGE
- BERTH RING
- FIXED STRUCTURE

HANDLING & POSITIONING AID
(SAT. SERVICE CAPABILITY)

GRUMMAN

R81-2100-154B

SIMILAR EQUIPMENTS - CONSTRUCTION UMBILICAL SYSTEM AND HPA UMBILICAL

An umbilical system is necessary to carry power, data, and (in the growth SOC) fluids to the work piece. The system identified for construction missions has an articulated arm which mounts the utilities at its tip. These umbilicals will be located at fixed locations on the SOC.

Although not presently incorporated in the HPA, since it is still in the early development stage, it is envisaged that an umbilical system will be incorporated into the flight version. A panel carrying the utilities will probably be located near the tip and the lines run up the arm. Direct mating of the workpiece to the umbilical panel will probably prove to be too restricting on design and may, therefore, be flying leads to be connected to a workpiece panel by the EVA crewman. Thus, the utilities would be readily available on the piece of equipment which supports the workpiece.

However, in locations where the HPA is not required, the provision of utilities at an interface may require development of the construction umbilical system.

SIMILAR EQUIPMENTS – CONSTRUCTION UMBILICAL SYSTEM AND HPA UMBILICAL SYSTEM

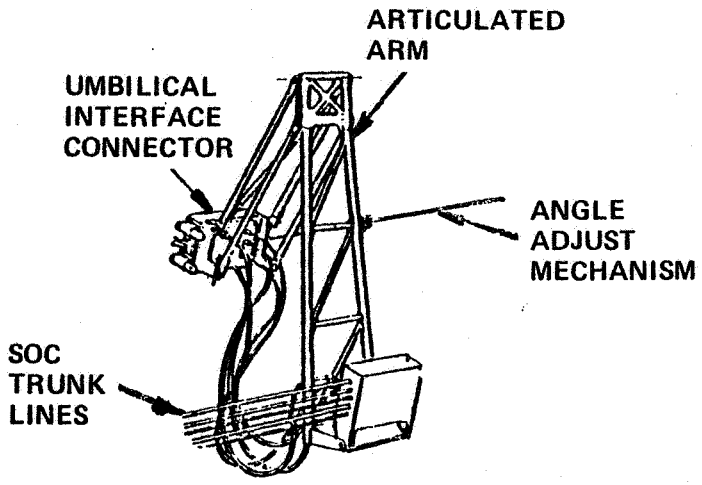

UMBILICAL SYSTEM
(CONSTR. MISSION REQMT)

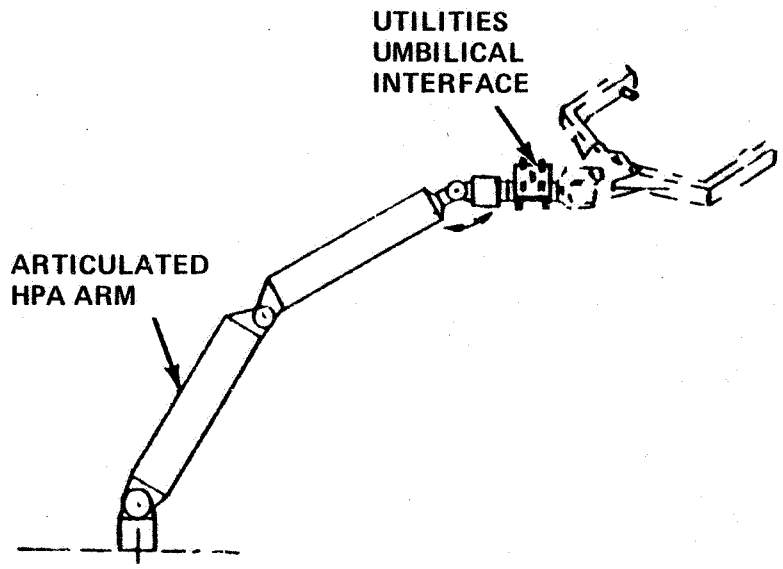

HANDLING & POSITIONING AID
(SAT. SERVICE CAPABILITY)

SUMMARY OF COMMON USAGE FOR SIMILAR EQMTS

This chart shows, in summary, that two pieces of satellite service equipment provide the necessary functions for the six pieces of construction equipment defined previously as 'similar'.

SUMMARY OF COMMON USAGE FOR SIMILAR EQMTS

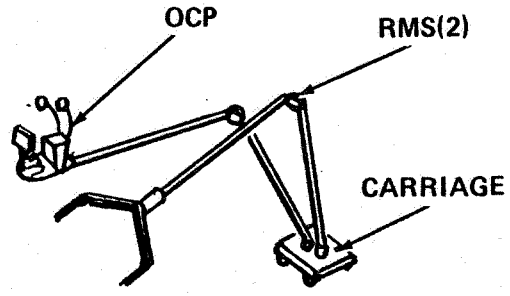

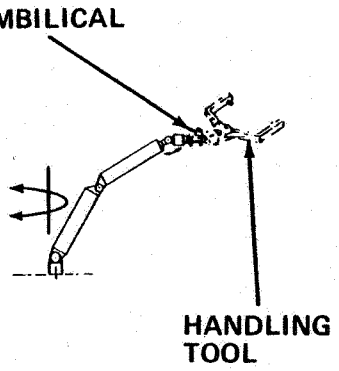

SATELLITE SERVICE EQUIPT	• MANIPULATOR	• MOBILE PLATFORM	• HANDLING/POSITIONING AID
CONSTR EQUIP	• MANIPULATOR	• MOBILE CP	• TURNTABLE/TILT TABLE • ARTICULATED CONSTR FIXTURE • UMBILICAL SYS • HANDLING TOOL MOUNT

GRUMMAN

EQUIPMENTS COMPARISON - CONSTRUCTION REQUIREMENTS VS SATELLITE SERVICE CAPABILITIES

As discussed on the preceding chart, of the 21 pieces of construction equipment identified in the main study, 9 pieces were of direct use for both construction and satellite servicing. Six pieces had functions similar to satellite service equipment and each should now be assessed for common usage for both types of missions. To accomplish this, the requirements identified in the main study for each of the six pieces of equipment were listed and compared to the capabilities of the comparable piece of satellite service equipment. This chart exemplifies this process for the construction "mobile cherry picker" compared to the satellite service "mobile platform". The five other comparisons were:

Payload handling tools vs end effectors

Manipulator system vs mobile platform manipulator + HPA

Turntable/tilt table vs HPA

Articulated construction fixture vs HPA

Construction umbilical system vs HPA umbilical.

EQUIPMENTS COMPARISON – CONSTRUCTION REQMTS VS SAT SERVICE CAPABILITIES

CONSTRUCTION UMBILICAL SYS/HPA UMBILICAL

ARTICULATED CONSTR FIXTURE/HPA

TURN & TILT TABLE/HPA

MANIPULATOR SYSTEM/MOBILE PLTFM ARM & HPA

HANDLING TOOLS/ENDEFFECTORS

EQUIPMENTS COMPARISON

CONSTRUCTION EQMT REQMT	SAT. SERVICE EQMT CAPABILITY
MOBILE CHERRY PICKER	MOBILE PLATFORM
• MAXIMUM LOAD – THE LARGEST AND THE HEAVIEST LOAD TO BE MOVED IS A FULLY FUELED OTV (APPROX 40,000 KG) PLUS ITS HEAVIEST PAYLOAD (APPROX 15,000 KG), FOR A TOTAL OF 55,000 KG. THIS REQUIREMENT COMES FROM THE CONTINGENCY CONDITION WHERE A JUST-LAUNCHED OTV MALFUNCTIONS AND MUST BE RECAPTURED.	– SPAR SIMULATION RUNS SHOW THAT IT IS FEASIBLE TO BERTH ORBITER (90,000 KG) TO SOC USING ORBITER MANIPULATORS, IF SOFTWARE IS MODIFIED (RMS 2ND USERS CONFERENCE)
• MAXIMUM SPEED – TBD	– MANIPULATOR TIP SPEED IS 0.2 FT/SEC WITH 14,500 KG.
REACH ENVELOPE – 18-M TIP RADIUS TO OTV IN HANGAR.	– MANIPULATOR TIP RADIUS IS 15.24 M
• MAXIMUM SIZE PAYLOAD – 4.2 M DIAMETER X TBD M LONG (DEPENDS ON SPACECRAFT GEOMETRY WHEN ATTACHED TO AN OTV).	– MANIPULATOR HANDLES AT LEAST 4.2 M DIA X 17.5 M PAY[illegible] CONTRIBUTION TO [illegible]TION

GRUMMAN

CONSTRUCTION REQUIREMENTS VS SATELLITE SERVICE CAPABILITIES OPEN ISSUES

Most of the construction requirements could be satisfied directly as found in the comparison of construction requirements with satellite service capabilities.

This chart considers those requirements which cannot be satisfied directly by the capabilities and offers candidate solutions.

Considering the mobile cherrypicker, its reach is required to be 18 m to place an OTV in its service hangar. There is, however, an elevator proposed to lift the OTV and its carriage out of the hangar and put it in line with the track system. Alternately, the latest SOC configuration shows a hangar which is located so that an OTV can be moved directly onto the track system. Either of these proposals would, presumably, reduce the required 18 m reach. The satellite service mobile platform arms offer a tip reach of 15.24 m, excluding added handling tools. Regarding maintenance, the satellite service mobile platform arm is an STS manipulator, which is designed to be maintained on the ground, whereas the requirement is for EVA space maintenance. It is proposed that spare arms be kept at the SOC to replace an operating arm for regular maintenance or for repair. This arm would then be transported to ground by the orbiter in its unused starboard RMS location, serviced, then returned to SOC. Alternatively, the arm could be modified for EVA maintenance. The last concern with the cherry picker is that it is required to be fail-operational/fail-safe, but the STS manipulator is fail-safe. It is considered that the two manipulator system of the mobile platform allows the second manipulator to continue a task or, at the least, to hold the workpiece while the failed manipulator is replaced.

The manipulator system, required for operations and buildup of the Initial SOC, bases its manipulator requirements on those of the STS manipulator, which provides ± 180° of shoulder yaw movement. However, the requirement is at variance with this since it calls for ± 360° of shoulder yaw. It is suggested that ± 180° be accepted, since it covers 360° in total. If an HPA is used as the system turntable, then an interface structure is necessary to mount the system on a berthing ring.

The last open issue is the use of an HPA as a turntable/tilt table. The requirement is that it be mounted on a standard berthing ring for use on initial and operational SOC and that it be mounted on a carriage for the growth SOC. Here again, interface structures are necessary to mount the HPA.

It is considered that the only significant issues are those concerning the mobile cherry picker/ mobile platform.

CONSTRUCTION REQTS VS SAT SERVICE CAPABILITIES – OPEN ISSUES

CONSTRUCTION REQMT	SAT SERVICE CAPABILITY	CANDIDATE RESOLUTIONS
• MOBILE CHERRY PICKER – 18 M REACH TO PUT OTV IN HANGAR	• MOBILE PLATFORM – 15.24 M TIP RADIUS	– INCORPORATE PROPOSED ELEVATOR
– EVA MAINTENANCE	– STS MANIP. GROUND MAINTAINED	– FREE RIDE MANIP TO GROUND IN ORBITER STBD RMS LOCATION – MODIFY MANIP FOR EVA MAINTENANCE
– FAIL OP/FAIL SAFE	– STS MANIP IS FAIL SAFE	– SECOND MANIP ALLOWS WORK AROUND WHILE FAILED MANIP FIXED
• MANIPULATOR SYSTEM – SHOULDER YAW TO BE ± 360°	• MOBILE PLTFM MANIP + HPA – MANIP PROVIDES ± 180°	– ACCEPT SINCE 360° COVERED
– MOUNT TURNTABLE ON STD BERTH RING	– HPA CANNOT MOUNT DIRECTLY	– PROVIDE INTERFACE STRUCTURE
• TURNTABLE/TILT TABLE – MOUNT ON STD BERTH RING & ON MOBILE CARRIAGE	• HANDLING & POSITIONING AID – CANNOT MOUNT DIRECTLY	– PROVIDE INTERFACE STRUCTURE

GRUMMAN

R81-2100-157B

EVOLUTIONARY GROWTH OF COMMON SATELLITE SERVICE AND CONSTRUCTION EQUIPMENTS

Much of these common usage equipments are used directly or developed from Orbiter hardware. This chart shows how the RMS, OCP, and HPA lead into initial, operational, and growth SOC equipments and the inter-relationships of those equipments over the early SOC years of operation.

EVOLUTIONARY GROWTH OF COMMON SAT SERVICE & CONSTRUCTION EQUIPMENTS

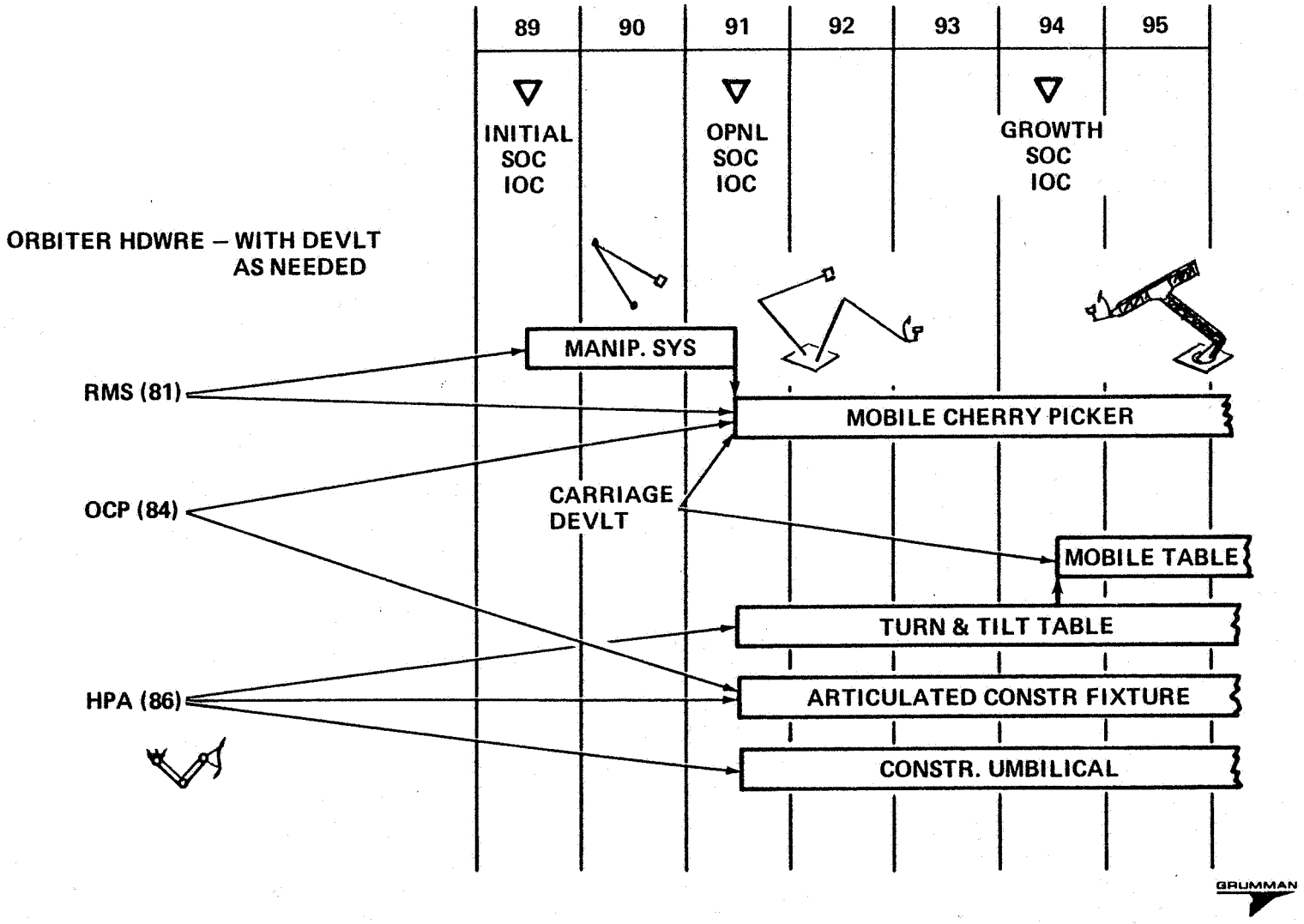

R81-2100-133B

IMPACT ON EQUIPMENTS IOC OF INCREASED SATELLITE SERVICE TRAFFIC

Analysis of the current mission model shows that the facilities and equipments defined for satellite servicing at operational and growth SOCs will support the missions until 1995, after the planned introduction of growth SOC. Subsequent to that date, projected traffic may require parallel satellite service operations which may demand additional equipments. These will be duplications of the equipments then existing.

Variations in the traffic model may introduce satellite servicing at the initial SOC. This would require an articulated fixture to support the workpiece. Therefore an HPA may be needed in 1989, the planned IOC for initial SOC.

IMPACT ON EQUIPMENTS IOC OF INCREASED SATELLITE SERVICE TRAFFIC

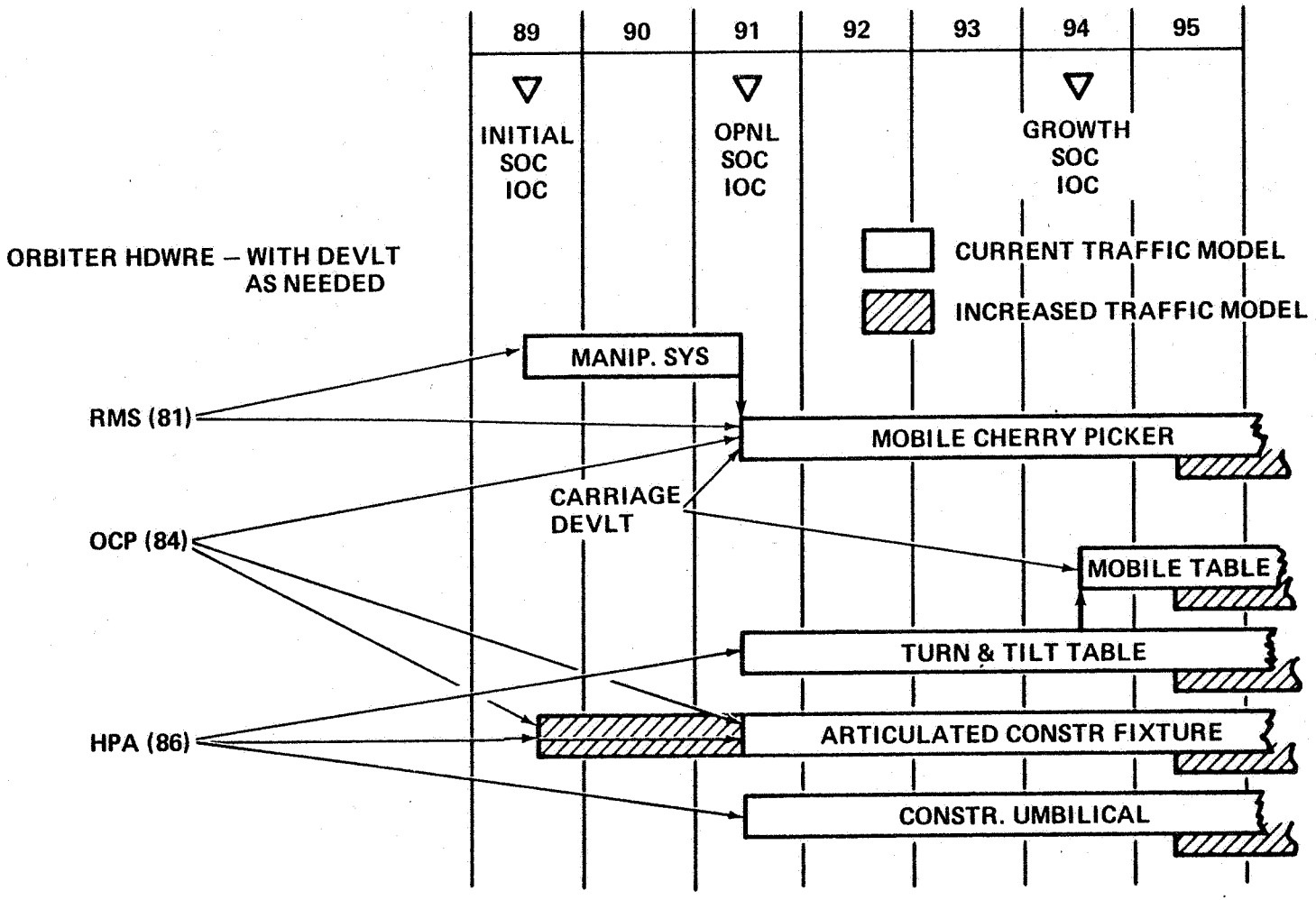

GRUMMAN

R81-2100-132B

SATELLITE SERVICING AT INITIAL SOC

The figure illustrates satellite servicing at the initial SOC. The main equipment added to the baseline configuration is a handling and positioning aid (HPA) to handle the satellite and an OCP to mount to the tip of the standard manipulator. A service supplies pallet, delivered by the orbiter, is berthed to a standard port on the service module (SM). This pallet provides supplies for maintenance/resupply operations of co-orbiting satellites and the proximity operations module (POM) which retrieves these satellites. When a satellite has been captured and returned to SOC, the POM propulsion unit berths the satellite to the HPA. The POM is demated from the satellite and transferred to the grapple point on the service supplies pallet where it is serviced and refueled by the EVA crewman on the OCP. The satellite is also serviced, in turn, by EVA crew who obtains change-out modules, etc from the supplies pallet.

SATELLITE SERVICE AT 'INITIAL' SOC

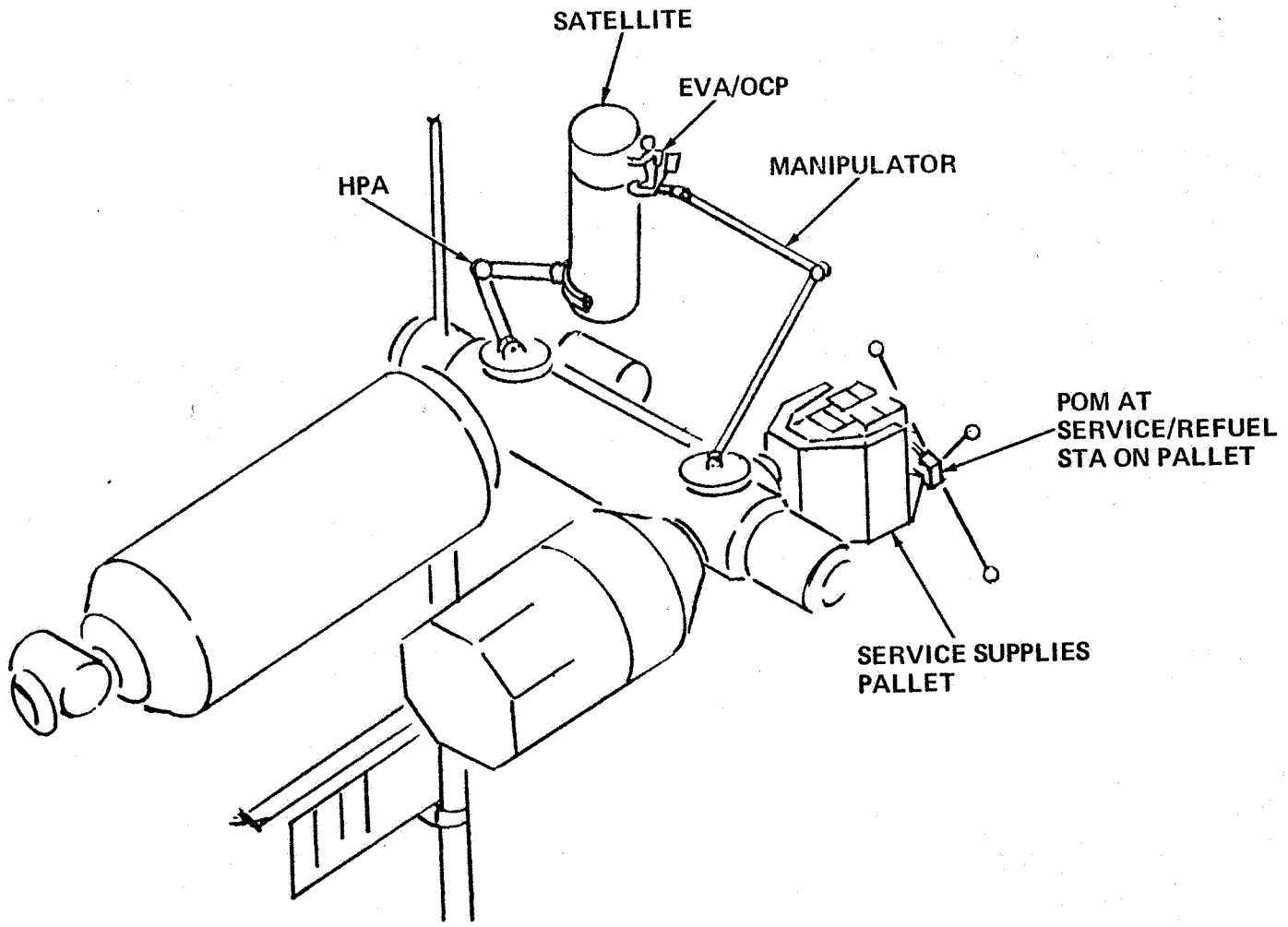

GRUMMAN

R81-2100-118W

SATELLITE SERVICING ANALYSIS

- SATELLITE SERVICING REQUIREMENTS & APPROACHES
  - SOC OPERATIONAL SERVICING REQMTS
  - AXAF ON-ORBIT SERVICE MISSION
  - GEO PLATFORM LAUNCH MISSION
- CONSTRUCTION & SATELLITE SERVICE EQUIPMENT REQUIREMENTS
  - COMMONALITY OF REQMTS
  - GENERAL PURPOSE EQUIPMENTS
- SERVICING MISSION NEEDS & BENEFITS
  - SATELLITE SERVICING NEEDS
  - SOC BENEFITS

GRUMMAN

R81-2100-183B

SOC SATELLITE CLASSES

The overall mission model includes a broad array of satellites and payloads which are deployed into various orbits. The satellites in low altitude orbits and higher energy orbits can be classified with respect to the Space Operations Center in the manner shown on the facing page. Some payloads will be attached directly to the SOC, while others will co-orbit as free flying satellites that can be reached from SOC. At higher altitudes, the satellites will be deployed with either a low energy or high energy upper stage that will deliver it to its proper orbit as depicted by the LEO propulsion, geosynchronous and planetary satellite classes. Each of these satellites can be supported by the Space Operations Center for in-orbit verification testing, checkout and launch into final orbit. Satellites at very high inclination orbits are beyond normal reach from the SOC and must rely upon services provided by the orbiter.

SOC SATELLITE CLASSES

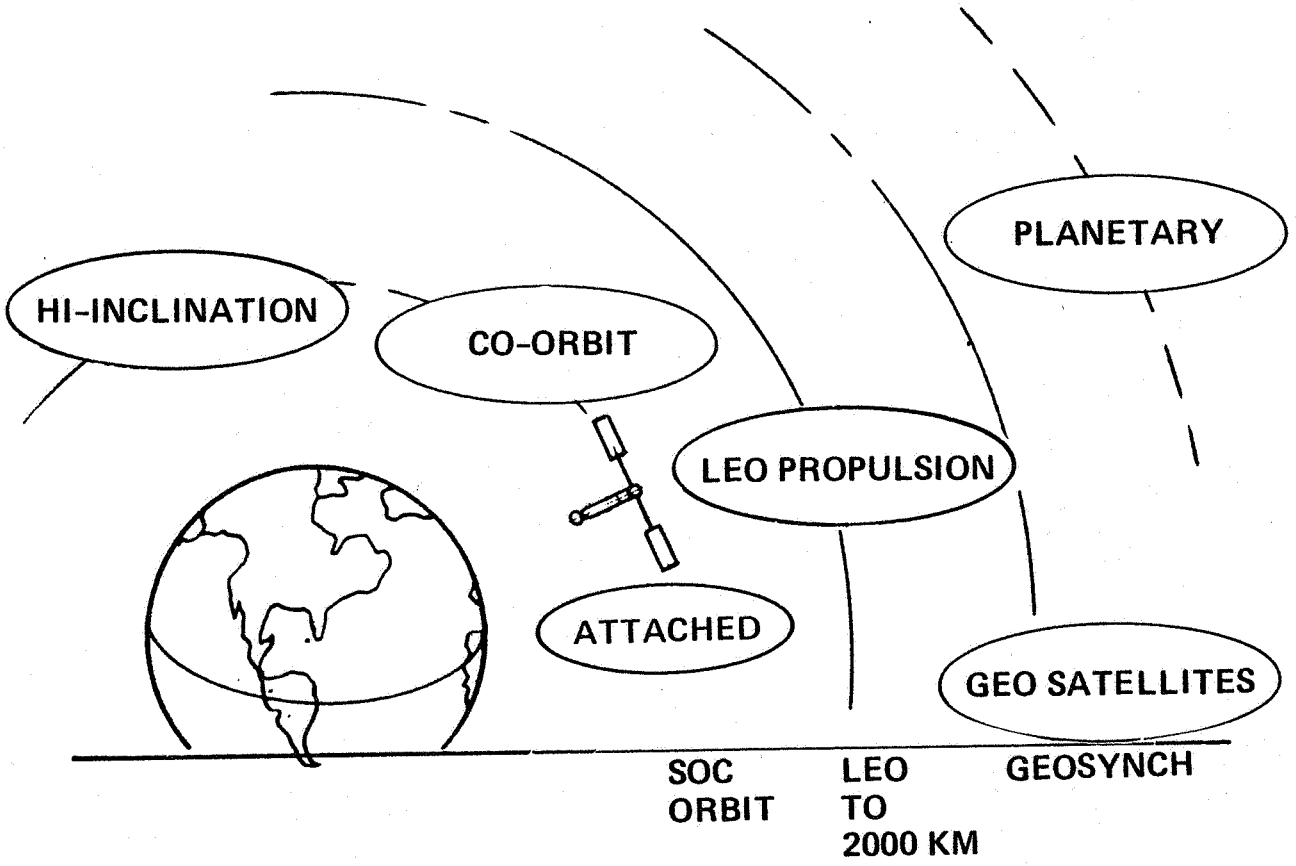

GRUMMAN

SATELLITE SERVICES AND POTENTIAL BENEFITS TO SATELLITE USER COMMUNITY

Recent studies, by Grumman and Lockheed, on satellite servicing from the shuttle orbiter have identified a broad range of services which could be made available to the satellite user community. The space operations center (SOC) will be able to provide many of the same services as the space transportation system (STS), and thereby release the orbiter for other mission assignments. The facing page denotes which services can be provided by either the STS or SOC and identifies the potential benefits which may be derived by the satellite user community.

Both systems, of course, can provide on orbit checkout and back up support during initial satellite deployment. Subsequent revisits for in-orbit examination and/or retrieval can also be performed with similar proximity equipment operating from either system. In addition both systems can provide on-orbit support to maintain, resupply, and reconfigure appropriate satellites, as needed. However, since the SOC is continuously manned in low earth orbit, it can provide more flexibility to deal with contingency situations than the orbiter. Once the satellite supplies and servicing equipment are delivered to orbit, the SOC can perform satellite servicing operations completely independent of STS schedule, mission time constraints and availability. Of course, only the orbiter is able to return high value satellites to earth. The SOC, in turn, can more readily provide on-orbit storage for satellites awaiting emergency repair instructions/equipment, return to earth or reentry disposal as unwanted debris.

SATELLITE SERVICES AND POTENTIAL BENEFITS TO SATELLITE USER COMMUNITY

SERVICES	STS	SOC	BENEFITS
• DEPLOYMENT	√	√	ENHANCED MISSION SUCCESS
• EXAMINATION • RETRIEVAL	√	√	NEEDED FOR ON-ORBIT SUPPORT AND EARTH RETURN SERVICES
• ON-ORBIT SUPPORT	√	√	COST EFFECTIVE FOR LONG DURATION MISSIONS OR EMERGENCY REPAIR
• ON-ORBIT STORAGE		√	COST EFFECTIVE FOR UNPLANNED REPAIR
• EARTH RETURN	√		COST EFFECTIVE FOR HIGH DEVELOPMENT COST SATELLITES; SCIENTIFIC OBSERVATION

SOC SERVICING INDEPENDENT OF STS SCHED, MISSION TIME & AVAILABILITY

GRUMMAN

1737-048B

SOC SUPPORT OF SATELLITE/PAYLOAD MISSION NEEDS

Considering each program category within the mission model, this chart give the percentage distribution for orbital inclination and altitude groupings.

SOC can support those missions which operate in low inclination orbit, nominally for 0° to 50°, and can initiate planetary and escape missions. In all but two categories, the majority of programs can utilize SOC. With resource observation programs, most missions require polar orbits and therefore not accessible form SOC. Similarly, about half of the global environment missions require polar orbits.

SOC SUPPORT OF SATELLITE/PAYLOAD MISSION NEEDS

PROGRAM CATEGORIES	ORBITAL DISTRIBUTION			
	HI INCL	LOW INCL		
	LEO	LEO	GEO	ESCAPE
ASTROPHYSICS	23%	63%	14%	–
SOLAR TERRESTRIAL	25%	25%	–	50%
PLANETARY	–	–	–	100%
LIFE SCIENCES	–	100%	–	–
RESOURCE OBS	88%	–	12%	–
GLOBAL ENVIRON.	50%	8%	34%	8%
MATL PROCESS	–	100%	–	–
COMMUNICATIONS	–	–	100%	–
SPACE TESTING	–	100%	–	–
DOD	?	?	?	–

SOC SUPPORT

GRUMMAN

PAYLOAD FAILURE RATE AFTER LAUNCH-CONVENTIONAL LAUNCH VEHICLES

Manned presence on SOC during satellite deployment can provide users with a higher prospect of mission success than can be expected from expendable launch vehicles. Unstowing satellite appendages, providing on-the-spot examination to deal with hangups and other contingencies during predeployment checkout will significantly reduce infant morality. Previous studies by Grumman and others have indicated that payload failures can be reduced by approximately one half by Orbiter support through the infant morality phase. Similar benefits are expected from the SOC which can "nurse" a newly-launched spacecraft free of STS mission duration constraints.

PAYLOAD FAILURE RATE AFTER LAUNCH CONVENTIONAL LAUNCH VEHICLES

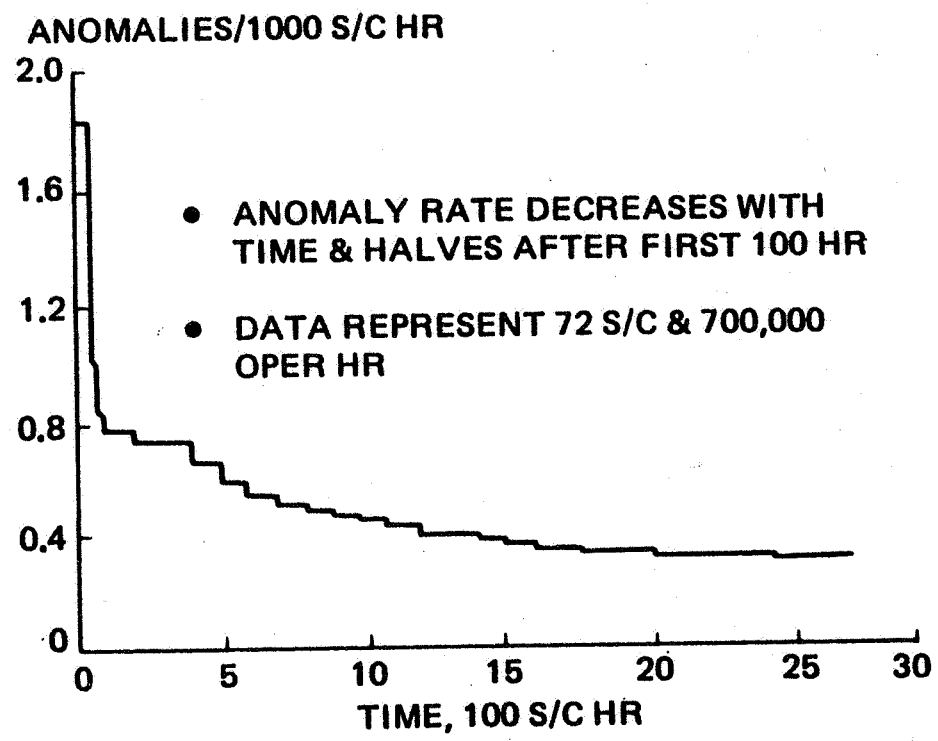

- ANOMALY RATE DECREASES WITH TIME & HALVES AFTER FIRST 100 HR
- DATA REPRESENT 72 S/C & 700,000 OPER HR

REF: "RELIABILITY PREDICTION AND DEMONSTRATION FOR MISSILE AND SATELLITE ELECTRONICS" RADC-TR-68-281, BELLINGER, BOOTHMAN, ET. AL., NOV 1968

GRUMMAN

RESUPPLY/DESIGN TRADEOFF

On-orbit maintenance, resupply, and reconfiguration of satellites is another avenue for user program cost reduction which can be used either to achieve long mission life times, to reduce requirements for on-orbit standby spacecraft, or to fix random failures that threaten mission continuation. Studies have been conducted which show that once the satellite mission exceeds one year, it is cheaper to double satellite design life through maintenance and resupply than through overly redundant design techniques. The facing page shows a tradeoff performed for GSFC which ultimately led to the present Multi Mission Spacecraft design for on-orbit servicing. The cost data provided in the figure are based on 1972 dollars. The tradeoff is just as valid today except that the 12-month MTTF crossover will occur at $50 M in 1981 dollars.

RESUPPLY/DESIGN TRADEOFF

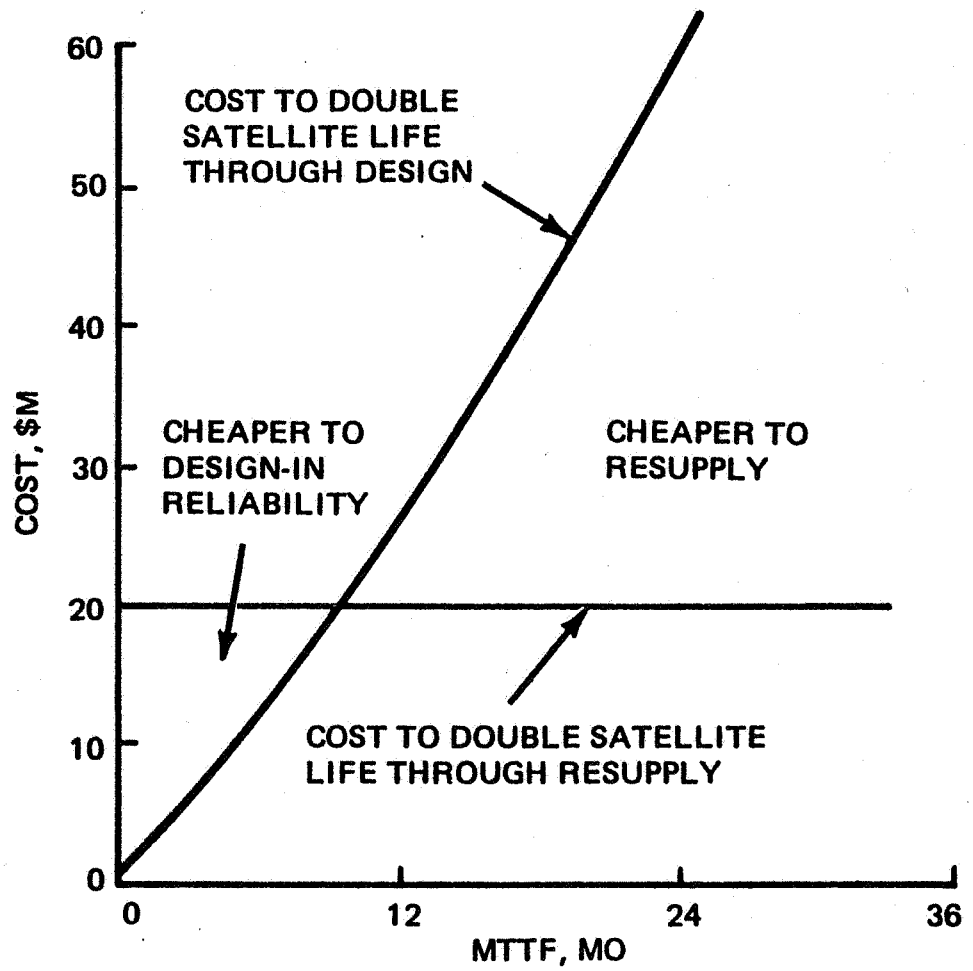

REF: "SATELLITE LONG-LIFE ASSURANCE – THE IMPACT OF THE SHUTTLE ERA", E. DIAMOND, J. FRAGOLA, GRUMMAN AEROSPACE CORP, AIAA PAPER 72-225, MARCH 1972

GRUMMAN

DEMONSTRATED COMMUNICATIONS SPACECRAFT LIFETIMES ACHIEVED

Early GEO communication satellites, for example, have demonstrated very poor life time performance. A recent survey of 80 satellites in geosynchronous orbit showed that at least half of the satellites failed before they reached their design life. The satellites included in the opposite figure are visualized as test articles in a 100% sample. Each is activated at time zero and deactivated when it fails or reaches the end of its test period. Satellite deactivation times were plotted as a fraction of design life to provide the normalized reliability curve shown for communication satellites. The convex appearance of the upper portion of the curve is characteristic of a design employing extensive redundancy - usually the case in a modern communications satellite. The use of hi-rel parts together with extensive redundance have been the only options available to date. During the SOC era, the introduction of space based manned orbital transfer vehicles will allow GEO satellites and LEO satellites remote from SOC to be serviced in-situ.

DEMONSTRATED COMMUNICATIONS SPACECRAFT LIFETIMES ACHIEVED

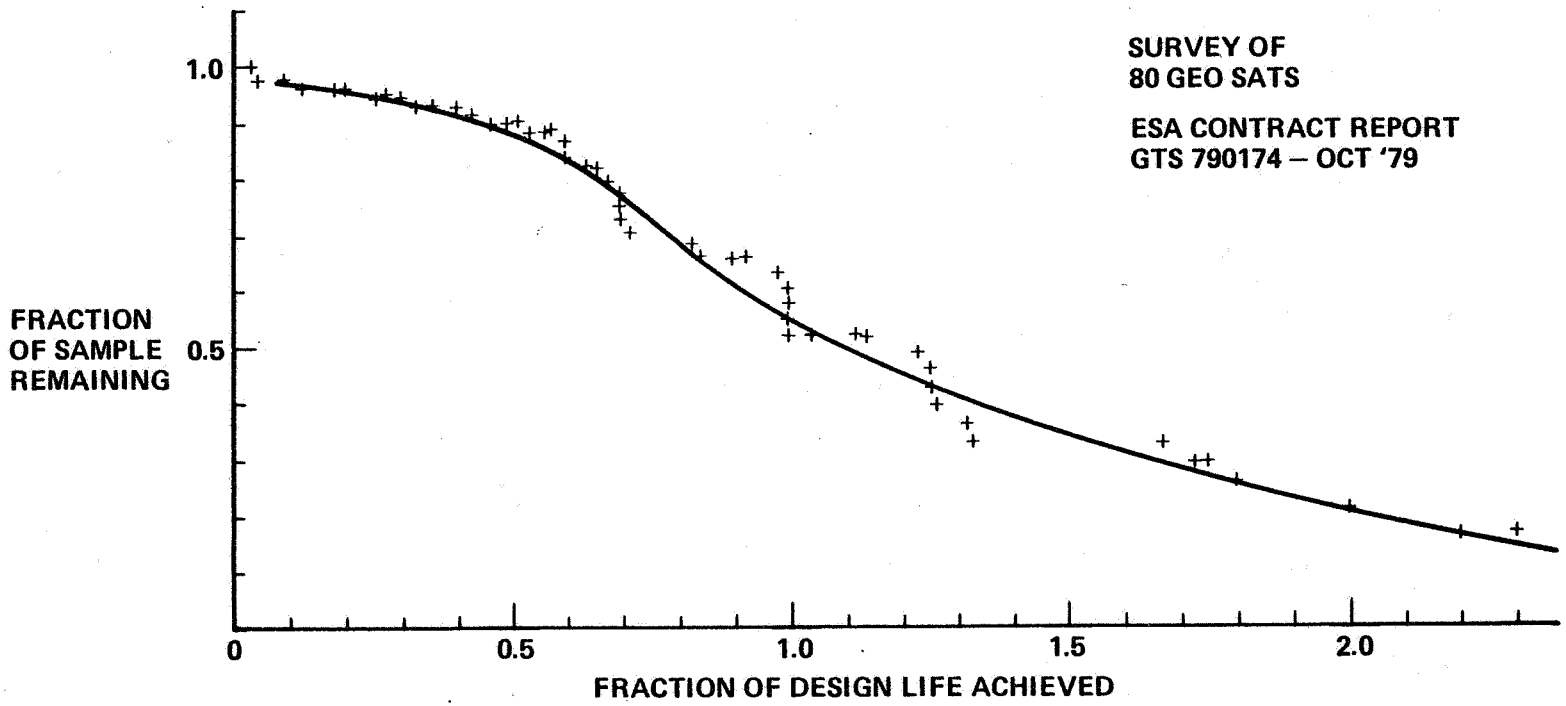

GRUMMAN

1737-007B

SATELLITE SERVICE MODES

SOC satellite service modes are illustrated on the facing page. The SOC is used as a transportation node for: assembly and deployment of satellites; on orbit support of attached and retrieval payloads; and as a base for in-situ servicing of remote satellites in LEO and GEO. Since the SOC is decoupled from ground launch constraints, it can provide on-demand service to examine and repair satellite random failure situations. The probability of random failure prior to end of mission or scheduled maintenance for observatory class satellites could be as high as 20%. The SOC can also support the build up of large systems in orbit such as an IR interferometer in LEO, a cosmic coherent optical system for GEO or perhaps a new large interplanetary spacecraft.

SATELLITE SERVICE MODES

- ON-DEMAND FLIGHTS
- SYSTEM BUILD UP ON ORBIT

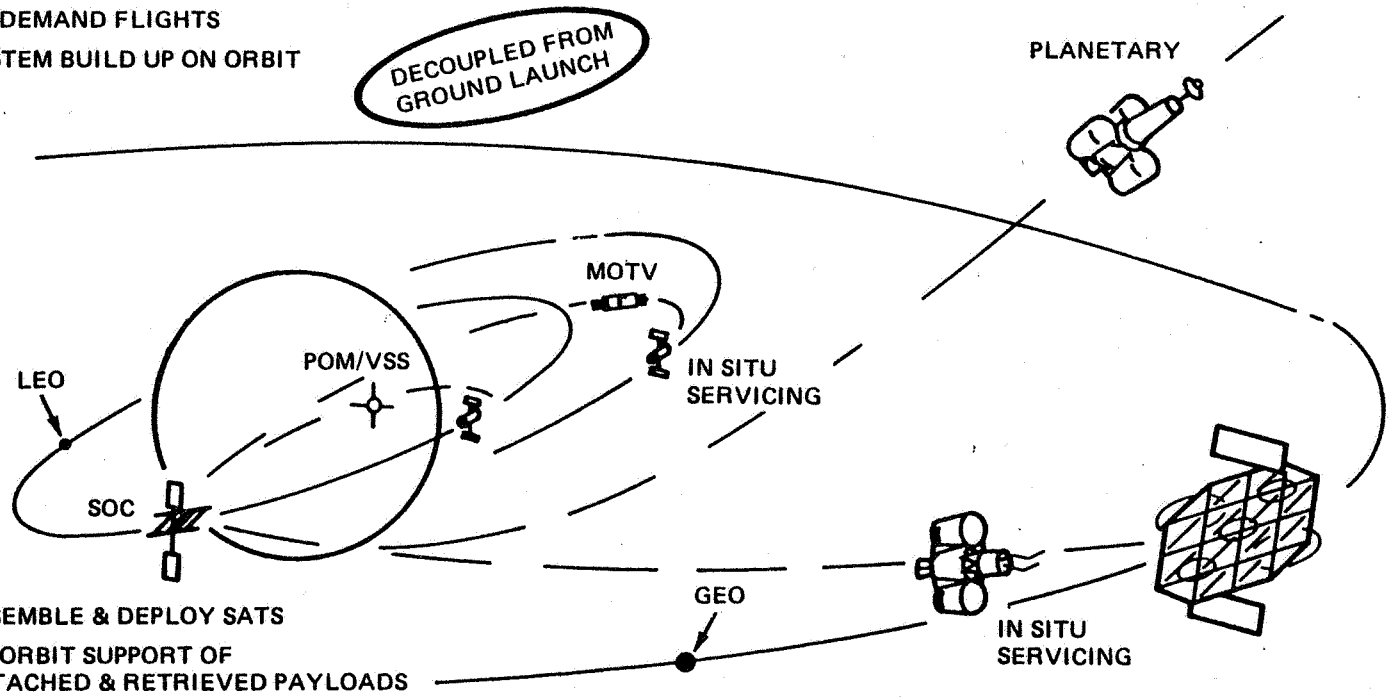

- ASSEMBLE & DEPLOY SATS
- ON ORBIT SUPPORT OF ATTACHED & RETRIEVED PAYLOADS

GRUMMAN

LEO SATELLITE SERVICING REGIONS FOR SOC BASED VEHICLES

Whenever practical all co-orbiting satellites in need of maintenance/resupply should be returned to the SOC for that purpose. Out sized platforms of comparable size to SOC should, of course, be serviced in-situ. Cost effective satellite servicing regions in LEO are shown on the facing page for SOC based vehicles. The region identified for service at SOC versus service in-situ are bounded by MOTV core stage capabilities for half range and maximum range payload retrieval performance, when limited to one STS propellant delivery flight. For example, the MOTV half-range retrieval capability defines the maximum plane change maneuver for bringing a satellite back to SOC for servicing and then returning the satellite to its original orbit. Satellites beyond the MOTV half range capability can also be returned to SOC for servicing if needed. However, it would be more economical if they were serviced in-situ. As shown in the figure, an MOTV can provide in-situ service to an MMS class satellite in a 185-km higher orbit which is almost 20° out of plane with respect to the SOC. The maximum payload retrieve range of the versatile service stage (VSS) is also shown for comparison.

LEO SATELLITE SERVICING REGIONS FOR SOC BASED VEHICLES

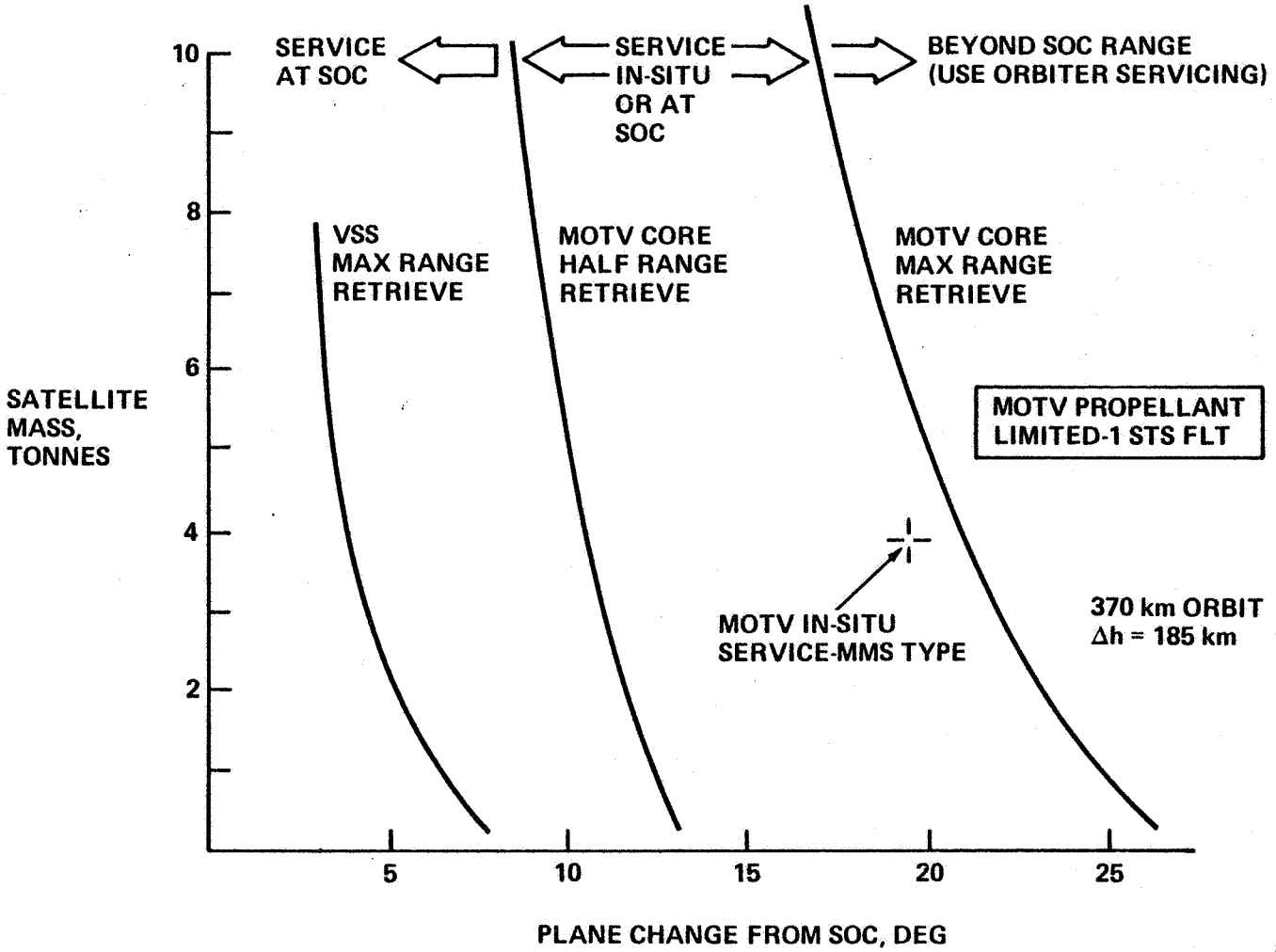

GRUMMAN

R81-2100-043

CO-ORBITING SATELLITES - CANDIDATE SERVICES FOR SOC

Candidate services for satellites co-orbiting with the SOC are tabulated in the manner shown on the facing page. These satellites, which are derived from the S/SUM data base, are nominally at 28.5° inclination and orbital altitudes between 300 and 600 km. Servicing events for launch and return are annotated to follow the approved/planned NASA schedule and the assumed opportunity schedule defined by Grumman's Satellite Services System Analysis Study. The scheduled and assumed events for in-orbit maintenance resupply and reconfiguration are annotated in a like manner. These data include satellites which require periodic resupply of cryogens (i.e., IR interferometer) or changeout of scientific instruments (i.e., space telescope and AXAF). It also includes one or two satellites which are not designed for in-orbit maintenance, such as the gamma ray transient explorer. There are yet other satellites of short mission duration, such as the x-ray spectroscope mission, which will only be serviced if needed.

CO-ORBITING SATELLITES – CANDIDATE SERVICES FOR SOC

	SATELLITE	SPONSOR	ORBIT ALT-km	ORBIT INC-DEG	MASS
A-3	ST – SPACE TELESCOPE	OSS	593	28.5	
OI-10	LDEF – LONG DURATION EXPOSURE FACILITY	OAST	509	28.5	
S-9	SUBSATELLITE FACILITY	OSS	296		
A-9	AXAF – ADVANCED X-RAY ASTROPHYSICS FACILITY	OSS	450		
A-61	SOLAR CORONA EXPLORER	OSS	60		
S-56	LARGE SOLAR OBSERVATORY	OSS	35		
A-17	LARGE AMBIENT DEPLOYABLE IR TELESCOPE	OSS	50		
A-18	IR INTERFEROMETER	OSS	40		
P-14	AUTOMATED PLANETARY STATION	OSS	400		
A-21	LARGE OPTICAL/UV TELESCOPE	OSS	450		
A-5	EUVE-EXTREME UV EXPLORER	OSS	550		
A-62	HI-ENERGY EXPLORER	OSS	463		
A-10	X-RAY TIMING EXPLORER	OSS	400		
S-13	SCADM – SOLAR CYCLE & DYNAMICS MISSION	OSS	575		

LEGEND

- ▲▼ SCHEDULED LAUNCH & RETURN
- △▽ ASSUMED LAUNCH & RETURN
- ● SCHEDULED SERVICE EVENT
- ○ ASSUMED SERVICE EVENT

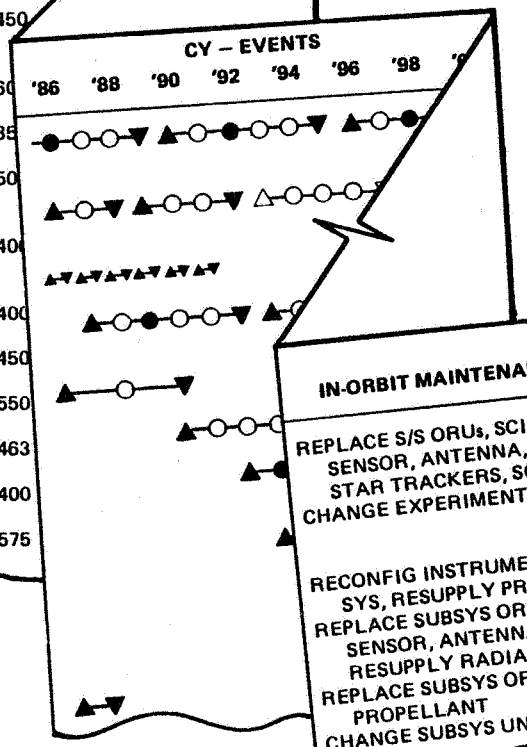

IN-ORBIT MAINTENANCE SUPPORT	REF
REPLACE S/S ORUs, SCI INSTR, GUID SENSOR, ANTENNA, RATE GYROS, STAR TRACKERS, SOLAR ARRAYS, ETC	1, 2, 3
CHANGE EXPERIMENT TRAYS	1, 2
RECONFIG INSTRUMENTS, MAINTAIN SUB/SYS, RESUPPLY PROP & GASSES	1, 2
REPLACE SUBSYS ORUs, SCI INSTR, GUID SENSOR, ANTENNA, ETC, RESUPPLY RADIATION DETECTOR GAS	1, 2, 4
REPLACE SUBSYS ORUs RESUPPLY RCS PROPELLANT	1, 2
CHANGE SUBSYS UNITS	.2

GRUMMAN

LEO CO-ORBITING SATELLITE SERVICE MISSION MODELS - NON-DOD & NON-FOREIGN

Economic analysis of the co-orbiting satellites included in the S/SUM data has resulted in fewer programs in LEO which in turn has a moderate impact on SOC required service events. The reference S/SUM service events are compared in the facing page with respect to the results of the high and low economic models. The in-orbit service events are denoted as scheduled maintenance and potential revisits. For LEO satellites "potential revisits" cover the possible need for more frequent on-orbit support and possible random failure situations which add to the schedule maintenance requirements. Both the high and low models include launch support for at least two co-orbiting satellites per year. The models also indicate that potential exists for on-orbit maintenance/resupply on three to four satellites per year. In addition, the SOC would have to support the retrieval of one or two satellites per year which are to be removed from orbit.

LEO CO-ORBITING SATELLITE SERVICE MISSION MODELS FOR SOC – NON DOD & NON FOREIGN

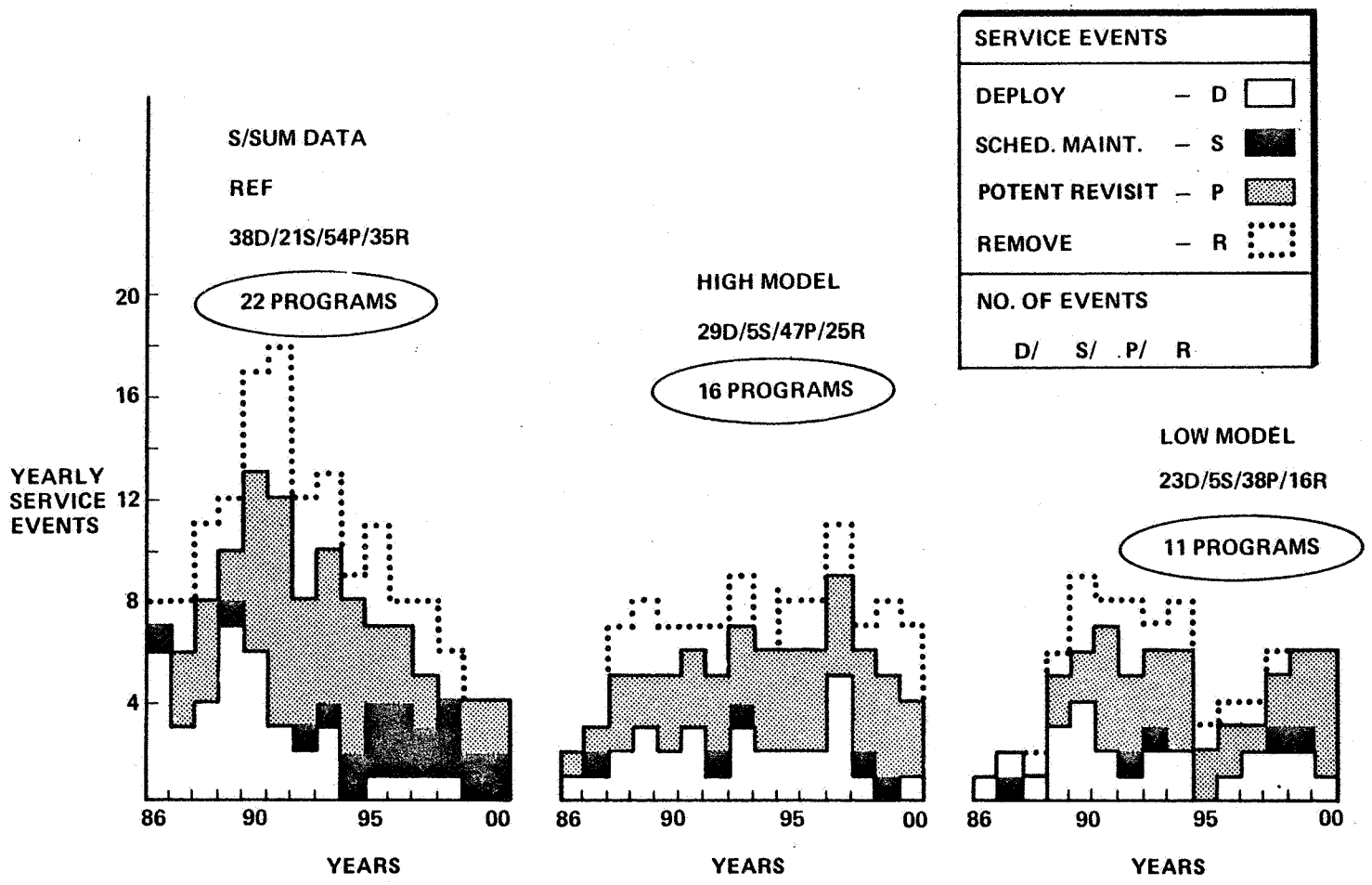

GRUMMAN

R81-2100-147B

REPRESENTATIVE SERVICE COSTS - LEO SATELLITES

Representative mission service costs are shown, on the facing page for a large scientific observatory such as the advanced x-ray astrophysics facility and a smaller MMS type satellite such as the large area modular array of reflectors (LAMAR) spacecraft. The cost of replacing these spacecraft in event that they fail prematurely has been estimated to cost between $150 - 200 M. The direct charge to the user to repair these satellites with the orbiter is estimated to be $16 to 19 M, or even higher if an OMS kit is required to reach the satellite. Nevertheless, to the user these costs are only 10% of the total replacement costs for a new satellite. The largest part of the shuttle revisit cost results from the charge to carry the required service equipment (i.e., proximity operations modules, handling/positioning aid, etc) to and from orbit. The SOC achieves its major cost advantage of $6 to 7 M since these equipments are always left in orbit.

REPRESENTATIVE SERVICE COSTS LEO SATELLITES

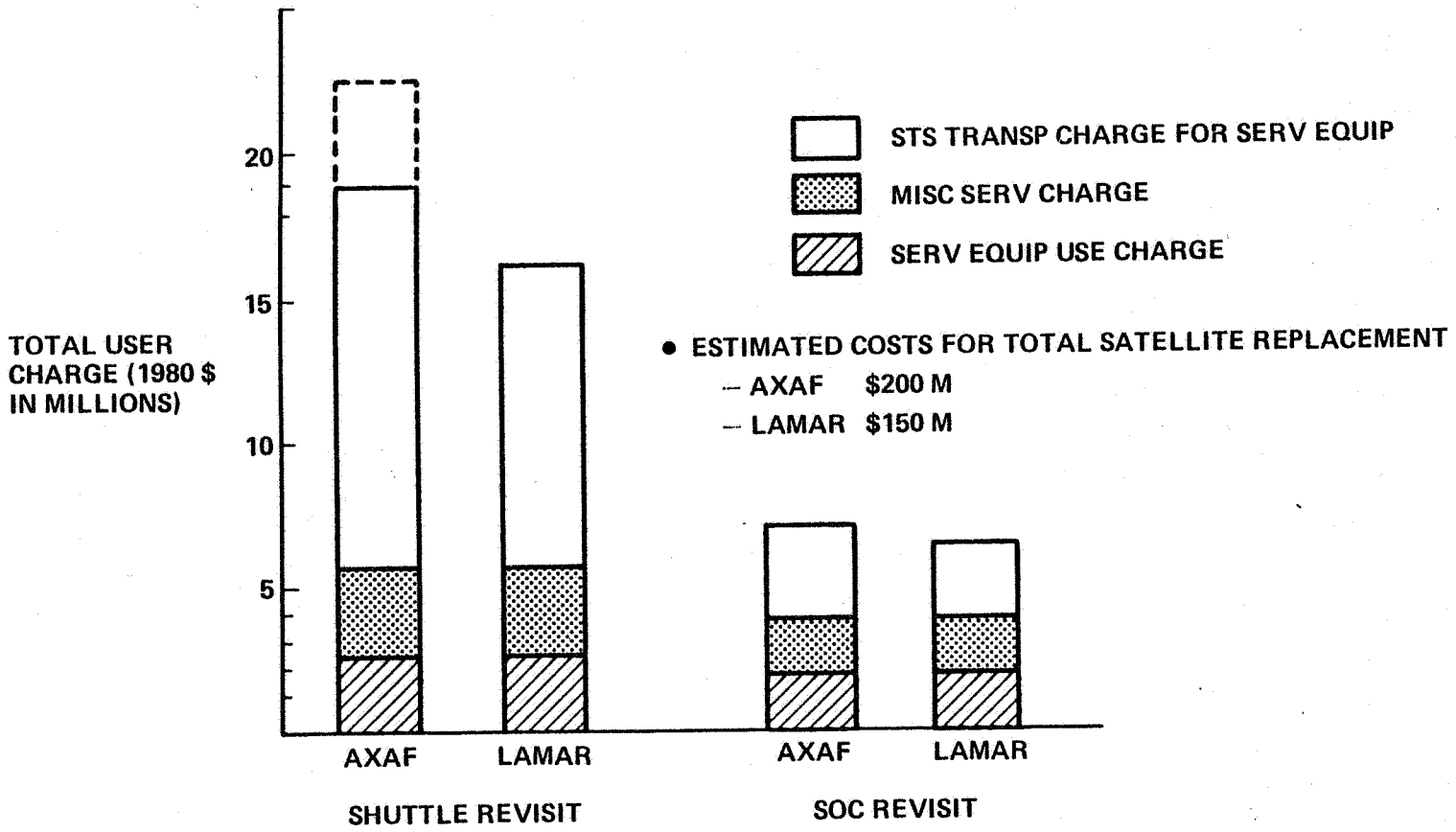

GRUMMAN

GEO SATELLITE SERVICE MISSION MODELS FOR SOC - NON-DOD & NON FOREIGN

A large number of satellites could be serviced in situ by SOC based vehicles. This includes satellites in various remote accessible orbits (e.g., 46° inclination or at GEO) and a few co-orbiting satellites in LEO which are too large to return for servicing at SOC (e.g., IR interferometer). At GEO, the economic models are dominated by the commercial telecommunication missions, which Boeing analyzed and defined. Telecommunication satellites are presently being designed for about 7 years. After 1988, it is assumed that all satellites will be designed for on-orbit maintenance.

Yearly service events are shown on the facing page for these GEO satellites, which exclude DOD and foreign satellites, with respect to the three economic mission models (high, medium, and low). The progressive build up of LEO SOC supported launch events is shown for each model. During the SOC era a large number of satellites will accumulate in GEO due to these launches alone. There will be in excess of 100 to 200 satellites, depending upon the model used, which will be repairable and operating in GEO at the same time. From this population alone, a sizable number of satellites can be expected to have random failures before their end of mission or scheduled maintenance time. These failures are identified as part of the scheduled revisits for GEO satellite periodic maintenance. Between the low and the high model there are 8 to 18 scheduled revisits needed every year if each telecommunication satellite is serviced at least once after deployment. Otherwise three to six random failures per year, which may occur regardless, can be expected to occur. During this period, 7 to 12 satellites per year will reach the end of their mission and should be removed from their orbital slot.

GEO SATELLITE SERVICE MISSION MODELS FOR SOC – NON DOD & NON-FOREIGN

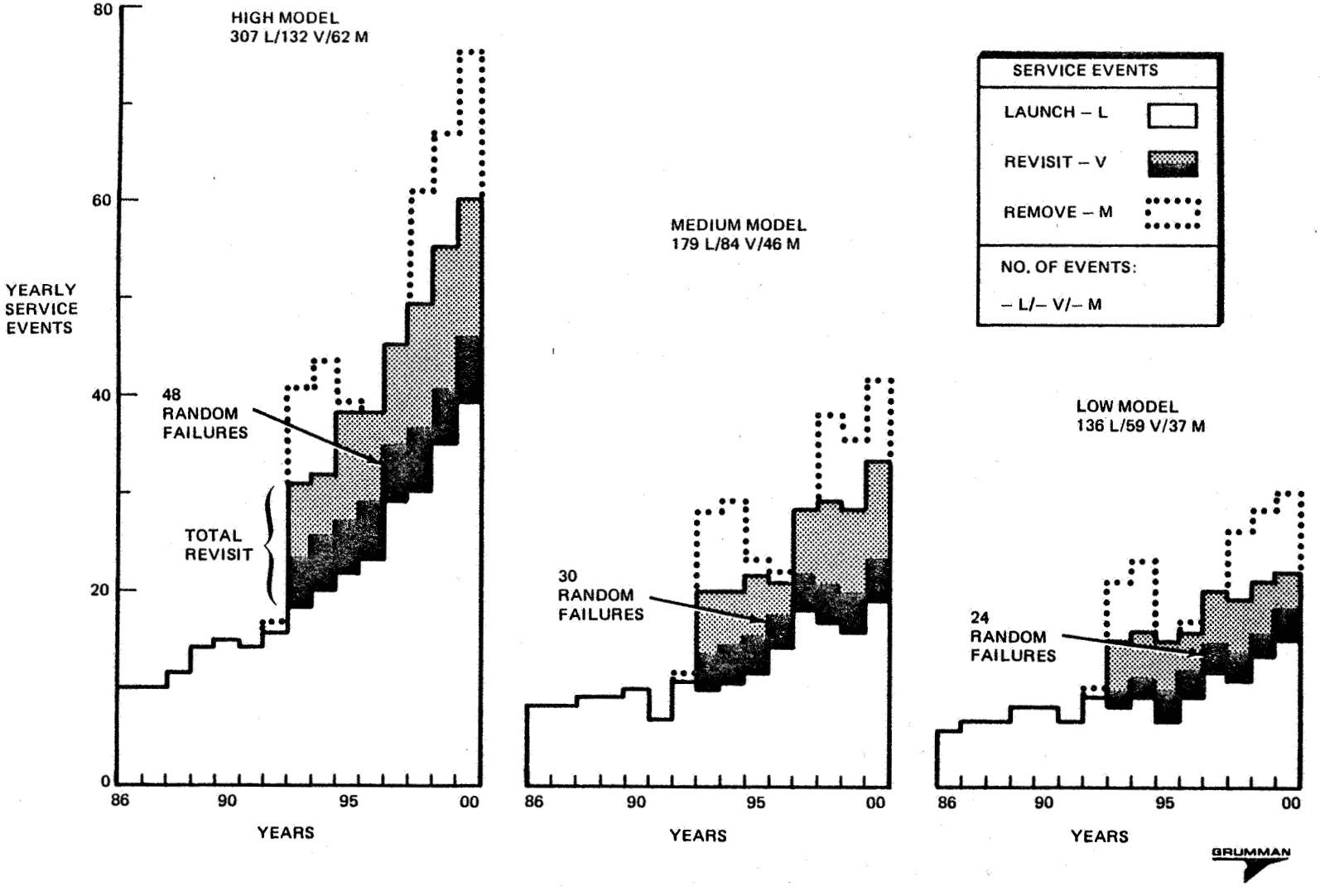

R81-2100-079W

POTENTIAL SAVINGS FROM SERVICING SATELLITES IN GEO WITH LEO BASED MOTV

The telecommunication satellite community can derive considerable savings by using SOC based vehicles to maintain and support their satellites in GEO. The facing page shows the range of potential savings that can be accrued by either servicing all satellites once or only repairing those as needed.

Both strategies deal with communication satellites that are designed for a 10 year mission life with in-orbit servicing provisions. The full traffic model includes all the scheduled maintenance revisits as defined by the three GEO satellite service mission models previously shown. The partial traffic model only considers random failure situations which could have a 15% or 20% probability of occurrence. In both instances the total savings, which exceeds $1 Billion by 2000, reflects the user's cost of transporting a new satellite to GEO less the cost of satellite repair. Satellite replacement costs are based upon $50 M/tonne and $35 M was used to cover the cost of transporting each satellite to orbit. Satellite servicing costs, in turn, are based upon a four satellite service sortie mission where each user shares the cost at $30 M per satellite. The total satellite servicing cost also includes an allowance to cover satellite related repair costs (i.e., 10% of new satellite cost).

POTENTIAL SAVINGS FROM SERVICING SATELLITES IN GEO WITH LEO-BASED MOTV

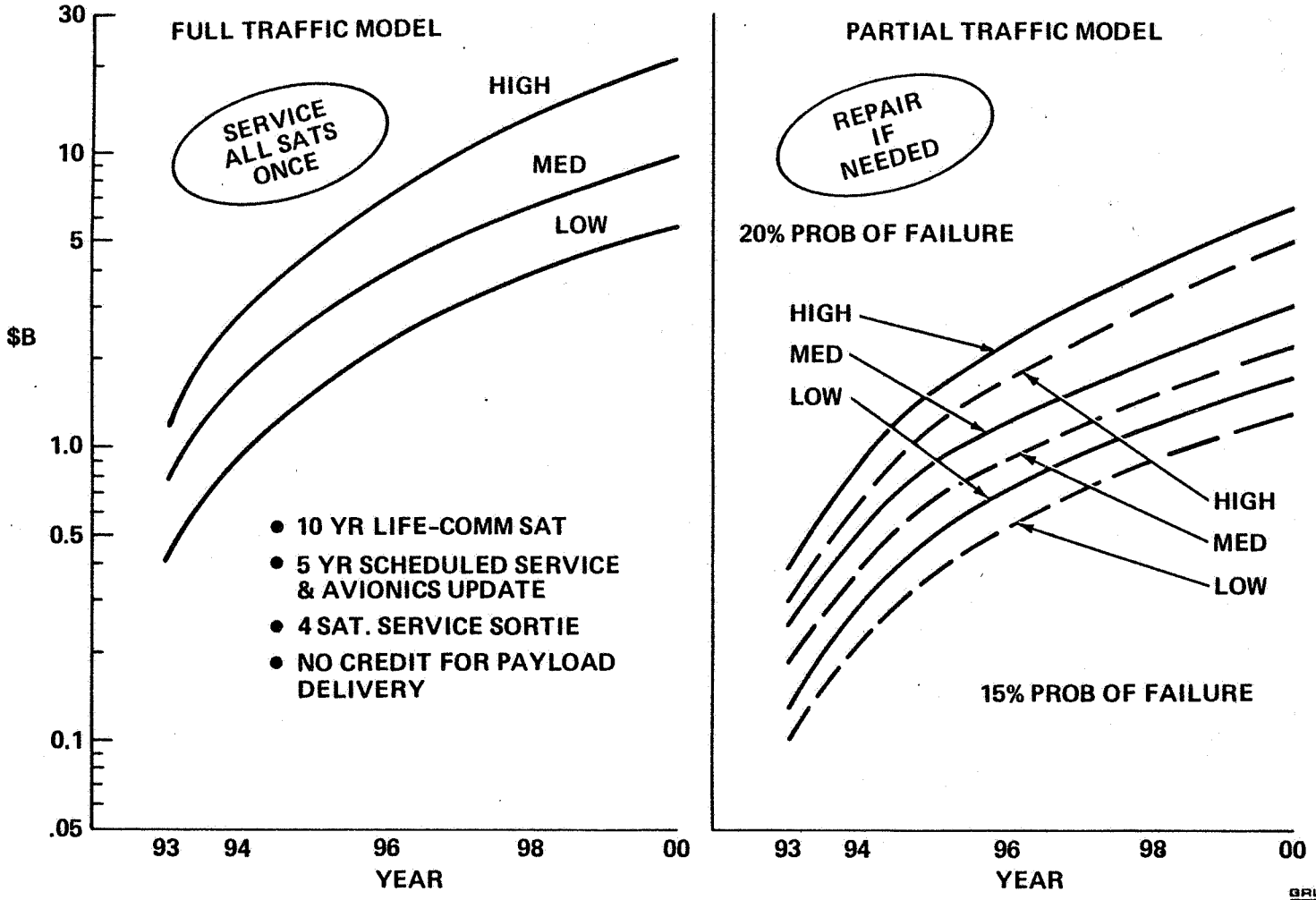

BRUMMAN

R81-2100-044W

MAJOR ADVANTAGES OF USING SOC VS ORBITER FOR SATELLITE SERVICING

The major benefits of using SOC to service satellites in LEO & GEO are because it provides a continuously manned transportation node, which is decoupled from potential ground launch problems and/or mission constraints of the Space Shuttle. The major advantages of using SOC to supplement the Orbiter for satellite servicing are summarized on the facing page.

By basing orbital service vehicles on the SOC it will be able to provide a broad range of services (including launch, on-orbit support, and removal from orbit) to the satellite users when they are needed. With advanced mission planning and early provisioning of satellite replaceable items and supplies on-board, the SOC should be immune to STS launch delays and vehicle availability problems. The SOC, of course, is not constrained by the Orbiter mission duration limits. By using the SOC to support satellite deployment and on-orbit maintenance in LEO, the Orbiter will be free to support other mission operations. SOC accessible orbits extend from LEO and GEO and include an out of plane sector at LEO which can be ±3° with a Versatile Service Stage of even ±20° or more with the core stage from Manned Orbital Transfer Vehicle (MOTV). Since it is continuously in orbit, the SOC offer greater flexibility to deal with satellite deployment situations which may require extended test and checkout operations with the payload operations control center (POCC), extended calibration operations or other contingencies that might arise. The SOC has the inherent capability for on-orbit storage, which can be used to deal with delays in maintenance and repair, to maintain a cache for common modules/equipment, or even as a depot for earth return spacecraft. By operating in a 28.5° orbit the SOC will be able to service 50% of the satellites in LEO, launch all GEO and planetary spacecraft, and support MOTV satellite service at GEO

It is estimated that servicing LEO satellites on SOC will save $12-18M of related orbiter transportation costs for performing the same function.

Potential savings from the maintenance and repair of GEO communication satellites with a SOC based MOTV can also be quite substantial ($200M/year for the low model if 20% are repaired due to random failures).

MAJOR ADVANTAGES OF USING SOC VS ORBITER FOR SATELLITE SERVICING

- DECOUPLED FROM STS LAUNCH DELAYS, MISSION LIMITS AND VEHICLE AVAILABILITY
- ON-DEMAND SERVICE TO SOC ACCESSIBLE ORBITS
  - LEO OUT OF PLANE SECTOR: ± 3° VSS (TMS) } WITH 5 MT RETURN PAYLOAD
    ± 20° MOTV CORE
  - GEO ALTITUDES AND HIGHER
- FLEXIBILITY IN SATELLITE DEPLOYMENT
  - EXTEND TEST AND CHECKOUT WITH POCC
  - EXTEND CALIBRATION OPERATIONS
  - CONTINGENCIES
- ON-ORBIT STORAGE CAPABILITY:
  - HANDLE OPERATIONAL DELAYS (MAINT/REPAIR & DEPLOY)
  - MAINTAIN COMMON MODULE/EQUIPMENT CACHE
  - RETURN TO EARTH DEPOT
- 28.5° SOC SERVES 50% LEO AT SAT PROGRAMS, ALL GEO AND PLANETARY LAUNCHES, AND ALL SERVICES IN GEO
  - FREES ORBITER TO SUPPORT HIGH INCL LEO PROGRAMS
- MAINTAIN/REPAIR LEO SATS AT SOC $7M/USE VS STS $19-25M
- INSITU MAINTAIN/REPAIR 20% GEO COMM SAT SAVES $200M/YR (FY-'95 LOW MODEL)

GRUMMAN

R81-2100-174B

SOC/Research and Applications

Integration

SOC/RESEARCH AND APPLICATIONS MISSIONS INTEGRATION

This chart is self-explanatory.

SPACE OPERATIONS CENTER

SOC Science & Applications Integration

NASA

BOEING

OC-1560

- Reported at midterm briefing:
  - Life sciences and materials processing research mission models, support requirements
  - SOC capabilities
- To be reported herein:
  - Military advanced technology testing missions
  - Integrated research mission models
  - Research versus operational requirements
  - SOC limitations and potential workarounds–
    - Internal volume
    - Crew man-hours and crew housing
    - Logistics module
    - Electrical power
    - Thermal control

820063-012

TESTING OF ADVANCED-TECHNOLOGY MILITARY SUBSYSTEMS AND COMPONENTS

The DoD, Earth and Space Sciences, Earth Sensing, Navigation and Communications mission categories were examined to determine if there were any research missions that would involve the SOC. It was judged that only the DoD advanced technology testing missions met the criteria. This class of research is described in the facing chart.

SPACE OPERATIONS CENTER

NASA

SOC-1519

Testing of Advanced-Technology Military Subsystems and Components

BOEING

Objectives: Provide extended-duration flight tests of DOD technology items: sensors, instruments, pointing and tracking systems, energy generation, and direction systems. Systems and equipment using hazardous fluids will be excluded from SOC-based testing.

Experiment equipment	Mass, kg (lb)	Envelope, m (ft)	Power (W)	Data management and communications	Stability and control
Small modules* Large modules*	250 + pallet 5,000 + pallet	2 x 2 x 2 1 mØ x 5 m	Average: Small module: 250 Large module: 1,000 Peak Small module: 1,000 Large module: 5,000 Standby Small module: 20 Large module: 100 Total	10K to 100K bps data rate Some will require encryption	Pointing accuracy Decoupled mount when high accuracy required Pointing stability Same as above Decoupled mount when high accuracy required Pointing hold time Minutes

Crew skills	Experiment time limits: Hours	Experiment time limits: Percentage of crew attending	Logistics	Experiment-peculiar requirements
EVA Test and checkout	60	2 crewmen	Consumables Included in mass Spares None	These will be exterior experiments, berthed to a port, tethered, or formation free-styles

820063-028

*These are not pressurized modules; they are generally apparatus mounted on a pallet.

OPERATIONAL MISSIONS AND REQUIREMENTS

The only potential missions that would qualify as "operational missions" are the "production modules" or "commercial manufacturing station" cited in the materials processing category. As described therein, these production modules can be considered to be free-flying, unmanned satellites that require periodic servicing for raw material supply/finished product retrieval. The configuration of these satellites cannot be defined at this time. It can be conjectured, however, that the materials supply/product retrieval could be accomplished by automated means.

The reference SOC operations and facilities will not be affected at all by this type of "operational" mission in that provisions have already been made for supporting in-situ satellite servicing missions either in manned or unmanned modes of operation.

SPACE OPERATIONS CENTER

NASA

SOC-1518

Changes in Operational Requirements

BOEING

EXPERIMENTAL RESEARCH	PROCESS DEVELOPMENT	COMMERCIAL MANUFACTURING
ON BOARD SOC →		STATIONKEPT
SMALL "SUITCASE" EXPERIMENTS, MULTIPURPOSE RESEARCH MODULES, AND PALLETS	DEDICATED-PURPOSE PROCESS DEVELOPMENT MODULE →	DEDICATED-PURPOSE COMMERCIAL MANUFACTURING FREE-FLYER
NASA-SPONSORED →		PROPRIETARY COMMERCIAL SYSTEMS
PERIODIC ATTENTION BY SOC CREW →	FULL-TIME "COMPANY" RESEARCHERS →	PERIODIC ATTENTION BY THE SOC CREW IN SATELLITE SERVICING MODE

820063-029

SOC RESEARCH MISSION MODELS

The next 3 charts give the integrated low, medium and high SOC Research Mission Models. These include the life sciences, materials processing, and military technology research missions. Also noted are the man-levels associated with the research payloads.

SOC Low-Research Mission Model

SOC-1387

CODE NO.	MISSION NAME	YEAR 90	91	92	93	94	95	96	97	98	99	00
MP01	SHORT EXPM'T MODULE DEL.			1	1	1	1	1	1	1	1	1
MP02	FULL EXPM'T MODULE DEL.											
MP03	EXPM'T PALLET DELIV.	1	1	1	1	1	1	1	1	1	1	1
MP04	MP EXPM'T MAN-LEVEL	.1	.1	.25	.25	.25	.25	.25	.25	.25	.25	.25
MP05	PROC DEV MODULE DEL.					2	4	4	4	4	4	4
MP06	PROC DEV MAN-LEVEL					2	2	2	2	2	2	2
MP07	PRODUCTION RESUPPLY											
MP08	PRODUCTION MAN-LEVEL											
MP09	PRODUCTION SPACECRAFT DEL.											
MP10	SHORT MODULE RETURN			1	1	1	1	1	1	1	1	1
MP11	FULL MODULE RETURN	1	1	1	1	1	1	1	1	1	1	1
MP12	PALLET RETURN					2	4	4	4	4	4	4
MP13	PROC DEV MOD RETURN											
MP14	PROD SPACECRAFT RETURN											
LS01	LS RESEARCH MOD DEL							1				
LS02	CELSS RESEARCH MOD DEL											
LS03	CENTRIFUGE RES MOD DEL											
LS04	CENTRIFUGE RES MAN-LEVEL											
LS05	LS EXPM'T MAN-LEVEL	.6	.6	.7	.7	.7	.7	1.5	1.5	2.5	2.5	2.5
DO01	DoD SMALL PALLET DEL.	1	1	1	2	1	2	1	2	1	2	1
DO02	DoD SMALL PALLET RETURN	1	1	1	2	1	2	1	2	1	2	1
DO03	DoD LARGE PALLET DEL.											
DO04	DoD LARGE PALLET RETURN											
DO05	DoD RESEARCH MAN-LEVELS	.1	.1	.1	.2	.1	.2	.1	.2	.1	.2	.1
	TOTAL NO. OF DELIVERIES	2	2	3	4	5	8	8	8	7	8	7
	TOTAL NO. OF RETURNS	2	2	3	4	5	8	7	8	7	8	7
	TOTAL MAN-LEVEL	.8	.8	1.05	1.15	3.05	3.15	3	3.85	4.85	4.85	4.85

SOC Medium-Research Mission Model

SOC-1388

CODE NO.	MISSION NAME	YEAR 90	91	92	93	94	95	96	97	98	99	00
MP01	SHORT EXPM'T MODULE DEL.			1	2	2	2	2				
MP02	FULL EXPM'T MODULE DEL.								1	2	2	2
MP03	EXPM'T PALLET DELIV.	1	1	1	2	2	4	4	4	4	4	4
MP04	MP EXPM'T MAN-LEVEL	.1	.1	.1	.5	.5	.5	1	1	1	1	1
MP05	PROC DEV MODULE DEL.			1	1	4	4	4	4	4	4	4
MP06	PROC DEV MAN-LEVEL			1	1	2	2	2	2	2	2	2
MP07	PRODUCTION RESUPPLY											
MP08	PRODUCTION MAN-LEVEL											
MP09	PRODUCTION SPACECRAFT DEL.											
MP10	SHORT MODULE RETURN			1	2	2	2	2				
MP11	FULL MODULE RETURN								1	2	2	2
MP12	PALLET RETURN	1	1	1	2	2	4	4	4	4	4	4
MP13	PROC DEV MOD RETURN			1	1	4	4	4	4	4	4	4
MP14	PROD SPACECRAFT RETURN											
LS01	LS RESEARCH MOD DEL					1						
LS02	CELSS RESEARCH MOD DEL											
LS03	CENTRIFUGE RES MOD DEL							1				
LS04	CENTRIFUGE RES MAN-LEVEL							.5	.5	.5	1	1
LS05	LS EXPM'T MAN-LEVEL	.6	.7	1.2	1.2	2	2	3	3	3	3	3
DO01	DoD SMALL PALLET DEL.	2	2	2	2	2	3	3	3	3	3	3
DO02	DoD SMALL PALLET RETURN	2	2	2	2	2	3	3	3	3	3	3
DO03	DoD LARGE PALLET DEL.		1		1	1	1	1	1	1	1	1
DO04	DoD LARGE PALLET RETURN		1		1	1	1	1	1	1	1	1
DO05	DoD RESEARCH MAN-LEVELS	.2	.7	.3	.7	.7	.7	1	1	1	1	1
	TOTAL NO. OF DELIVERIES	3	4	5	8	12	14	15	12	14	14	14
	TOTAL NO. OF RETURNS	3	4	5	8	11	14	14	12	15	14	14
	TOTAL MAN-LEVEL	.9	1.5	1.6	3.4	5.2	5.2	7.5	7.5	7.5	8	8

SOC High-Research Mission Model

SOC-1398

CODE NO.	MISSION NAME	YEAR 90	91	92	93	94	95	96	97	98	99	00
MP01	SHORT EXPM'T MODULE DEL.											
MP02	FULL EXPM'T MODULE DEL.		1	1	1	1	1	1	1	1	1	1
MP03	EXPM'T PALLET DELIV.	2	2	4	8	8	8	8	8	8	8	8
MP04	MP EXPM'T MAN-LEVEL	.25	.25	1	1	2	2	2	2	2	2	2
MP05	PROC DEV MODULE DEL.		2	2	4	4	12	12	12	12	12	12
MP06	PROC DEV MAN-LEVEL		2	2	2	2	4	4	4	4	4	4
MP07	PRODUCTION RESUPPLY									4	4	4
MP08	PRODUCTION MAN-LEVEL									.5	.5	.5
MP09	PRODUCTION SPACECRAFT DEL.									1		
MP10	SHORT MODULE RETURN											
MP11	FULL MODULE RETURN		1	1	1	1	1	1	1	1	1	1
MP12	PALLET RETURN	2	2	4	8	8	8	8	8	8	8	8
MP13	PROC DEV MOD RETURN		2	2	4	4	12	12	12	12	12	12
MP14	PROD SPACECRAFT RETURN											
LS01	LS RESEARCH MOD DEL		1									
LS02	CELSS RESEARCH MOD DEL											1
LS03	CENTRIFUGE RES MOD DEL				1							
LS04	CENTRIFUGE RES MAN-LEVEL				1	1	1	1	1	1	1	1
LS05	LS EXPM'T MAN-LEVEL	1.1	2.5	3.5	3.5	3.5	4.5	4.5	4	4	4	6
DO01	DoD SMALL PALLET DEL.	2	2	3	3	3	4	4	4	5	5	5
DO02	DoD SMALL PALLET RETURN	2	2	3	3	3	4	4	4	5	5	5
DO03	DoD LARGE PALLET DEL.	1	1	1	1	2	2	2	2	2	2	2
DO04	DoD LARGE PALLET RETURN	1	1	1	1	2	2	2	2	2	2	2
DO05	DoD RESEARCH MAN-LEVELS				1	1	1	1	1	1	1	1
	TOTAL NO. OF DELIVERIES	5	9	11	18	18	27	27	27	29	28	29
	TOTAL NO. OF RETURNS	5	8	11	17	18	27		27	28	28	28

0063-032

SUMMARY OF SOC INVOLVEMENT IN RESEARCH/APPLICATIONS MISSIONS

The facing chart summarizes the involvement of SOC in the various classes of research and application missions and the benefits of this involvement.

SPACE OPERATIONS CENTER

Summary of SOC Involvement in Research and Applications Missions

NASA BOEING

SOC-1477

RESEARCH/ APPLICATIONS SYSTEM	SOC INVOLVEMENT	BENEFITS OF SOC INVOLVEMENT
"SUITCASE" EXPERIMENTS	• PROVIDE INTERNAL STOWAGE LOCATION • PROVIDE POWER • PROVIDE CREW TIME TO INSTALL PACKAGE, INFREQUENTLY ATTEND	• CONTINUOUS LONG DURATION EXPERIMENTAL TIME
"SPACE AVAILABLE" EXPERIMENTS	• PROVIDE INTERNAL LOCATION • PROVIDE POWER, THERMAL CONTROL, DATA MANAGEMENT, ECLS, ETC. • PROVIDE CREW TIME (FRACTIONAL MAN-YEAR PER YEAR) TO INSTALL EQUIPMENT, CONDUCT EXPERIMENTS, MODIFY EXPERIMENTAL SETUPS, INTERPRET DATA	• CONTINUOUS LONG-DURATION EXPERIMENTAL TIME • EXPERIMENTERS DO NOT HAVE TO INCUR THE EXPENSE OF DESIGNING, MANUFACTURING, TESTING, AND DELIVERY OF A HABITABLE MODULE FOR INSTALLATION OF THEIR EXPERIMENTAL EQUIPMENT
RESEARCH MODULES	• PROVIDE BERTHING PORTS • PROVIDE POWER, DATA BUS, COMMUNICATIONS, AND PARTIAL ECLS SUPPORT • PROVIDE CREW TIME (UP TO SEVERAL MAN-YEARS PER YEAR) TO CONDUCT FULL TIME RESEARCH/PROCESS DEVELOPMENT OPERATIONS. SOME OF THE CREW MAY BE COMMERCIAL CUSTOMER EMPLOYEES.	• CONTINUOUS, LONG-DURATION EXPERIMENT TIME • SOC WILL PROVIDE SOME OF THE SUBSYSTEMS, THEREFORE, THE RESEARCH MODULE BUYER DOES NOT HAVE TO PAY FOR THE DEVELOPMENT OF THESE. • SOC WILL PROVIDE THE CREW SUPPORT PROVISIONS (SLEEPING QUARTERS, DINING, ETC.)
COMMERCIAL MANUFACTURING STATION (FREE-FLYER)	• PROVIDE PERIODIC IN-SITU SERVICING OF STATION TO PROVIDE RESUPPLY, MAINTENANCE, REFURBISHMENT	• THIS WILL BE A ROUTINE SERVICE PROVIDED BY SOC SO THE COMMERCIAL CUSTOMER WILL NOT HAVE TO PAY FOR THE DEVELOPMENT OF DEDICATED EQUIPMENT OR OPERATIONS

820063-49

INTERNAL VOLUME LIMITATIONS

The internal volumes available on SOC were compared to projected user requirements and it was found that there were substantial incompatibilities. The facing chart shows some alternative concepts for resolving the incompatibilities.

During the early years, the users will undoubtedly size their experiments to fit within the SOC available spaces. However, as the research activity expands, it will eventually be necessary to add dedicated research modules. Far out in time, when some of the research pays off in the development of a commercial process, the customer will put up a free-flyer satellite that is independent of the SOC physical limitations.

SPACE OPERATIONS CENTER

NASA

SOC-1299

Internal Volume Limitation Alternative Workarounds

BOEING

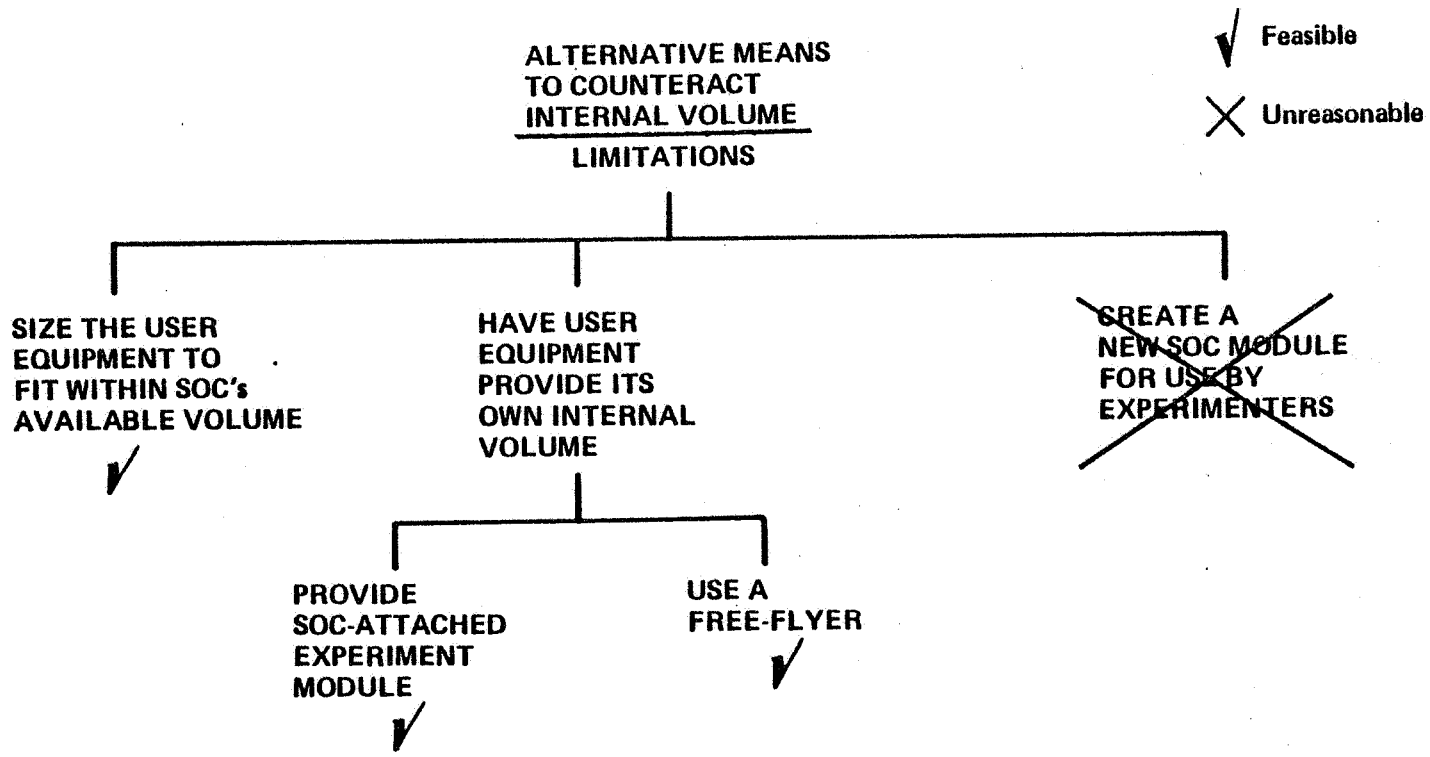

✓ Feasible

✗ Unreasonable

820063-50

CREW MAN-HOURS LIMITATIONS

The crew man-hours available vs. the user requirements were compared and substantial incompatibilities were found. The facing chart shows some alternative work-arounds.

In the early years, the users will design their equipment so that minimal crew attention will be required. However, as the research programs evolve, the equipment will require more and more crew attention finally leading to the necessity of full or short-term additions to the SOC crew size to conduct the research. These additional people could be either NASA astronauts or, in the case of proprietary materials process development, the additional crewmembers would be company-paid researchers.

As long as the total crew size were eight or less, there will be private quarters for all. When the total crew size exceeds eight but is less than 12 it will be necessary to double-up in the sleeping quarters. This doubling-up would only be practical if this extra crew size were required infrequently, i.e., "short term" (one 90 day staytime experiment once or twice a year). If a crew of 9 to 12 people were required on a continual basis, then it would be preferable to install a mini-habitat module that would provide sleeping quarters for four people.

When the total crew size exceeds 12 people, it is time for the experimental community to buy a new research-dedicated SOC as their manning requirements will dominate the crew workload.

SPACE OPERATIONS CENTER

SOC Crew Man-Hours Limitation Alternative Workarounds

NASA

BOEING

SOC-1471

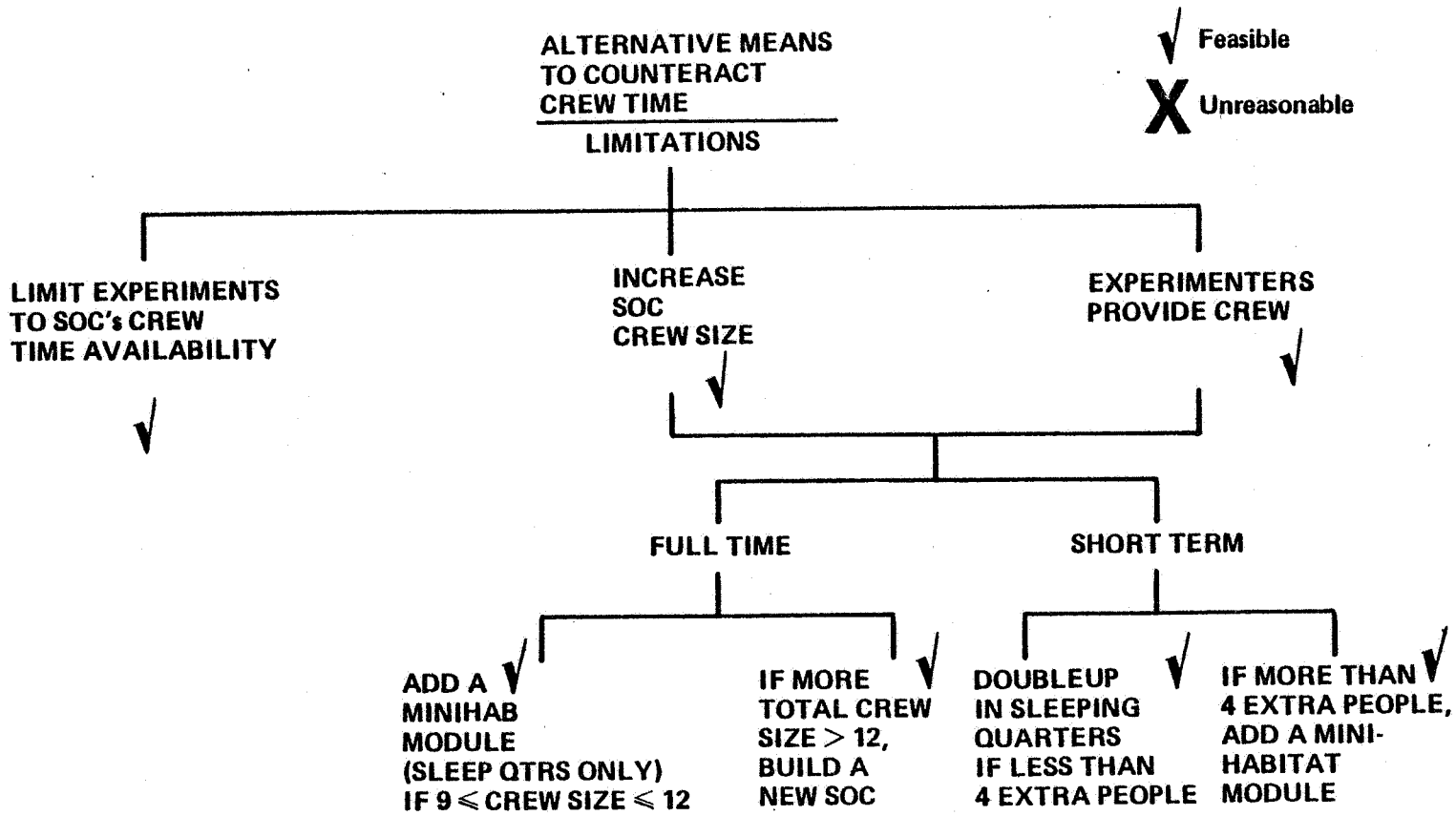

820063-51

MINI-HABITAT MODULE

Add the mini-habitat module shown in the facing chart to the SOC system when the full-time crew size exceeds eight people. The mini-habitat provides sleeping quarters for four people during normal operations. An additional four people could be accommodated for short terms by double-bunking. This mini-habitat should be berthed to the Docking Tunnel as shown in the following chart. Note that the Airlock Module No. 2 is located on the opposite end from the Docking Tunnel as it is still necessary to provide two egress paths from this habitable space.

SPACE
OPERATIONS
CENTER

Minihabitat Module

NASA

BOEING

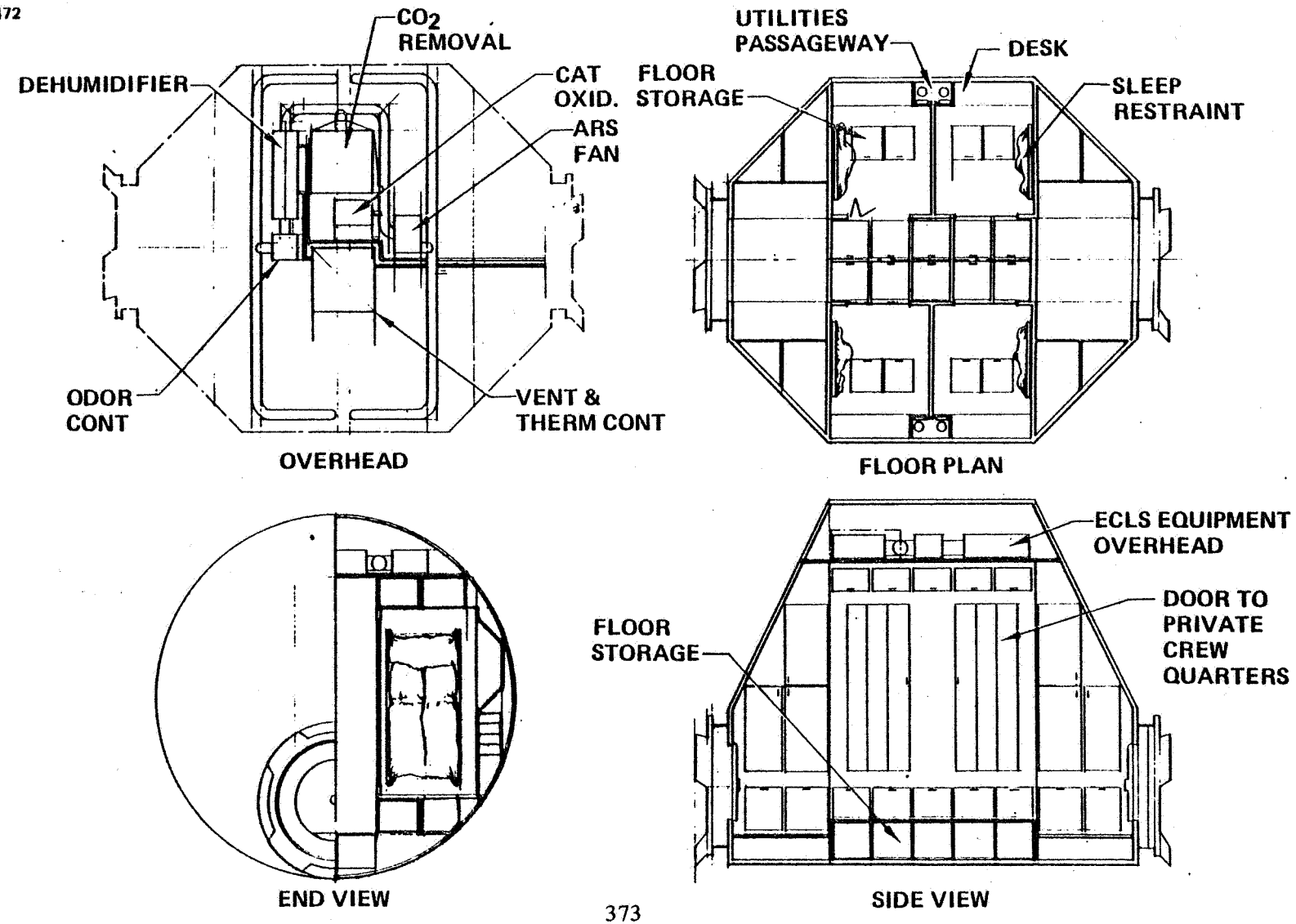

820063-52

SPACE
OPERATIONS
CENTER

NASA

BOEING

SOC-1469

Installed Location of Minihabitat Module

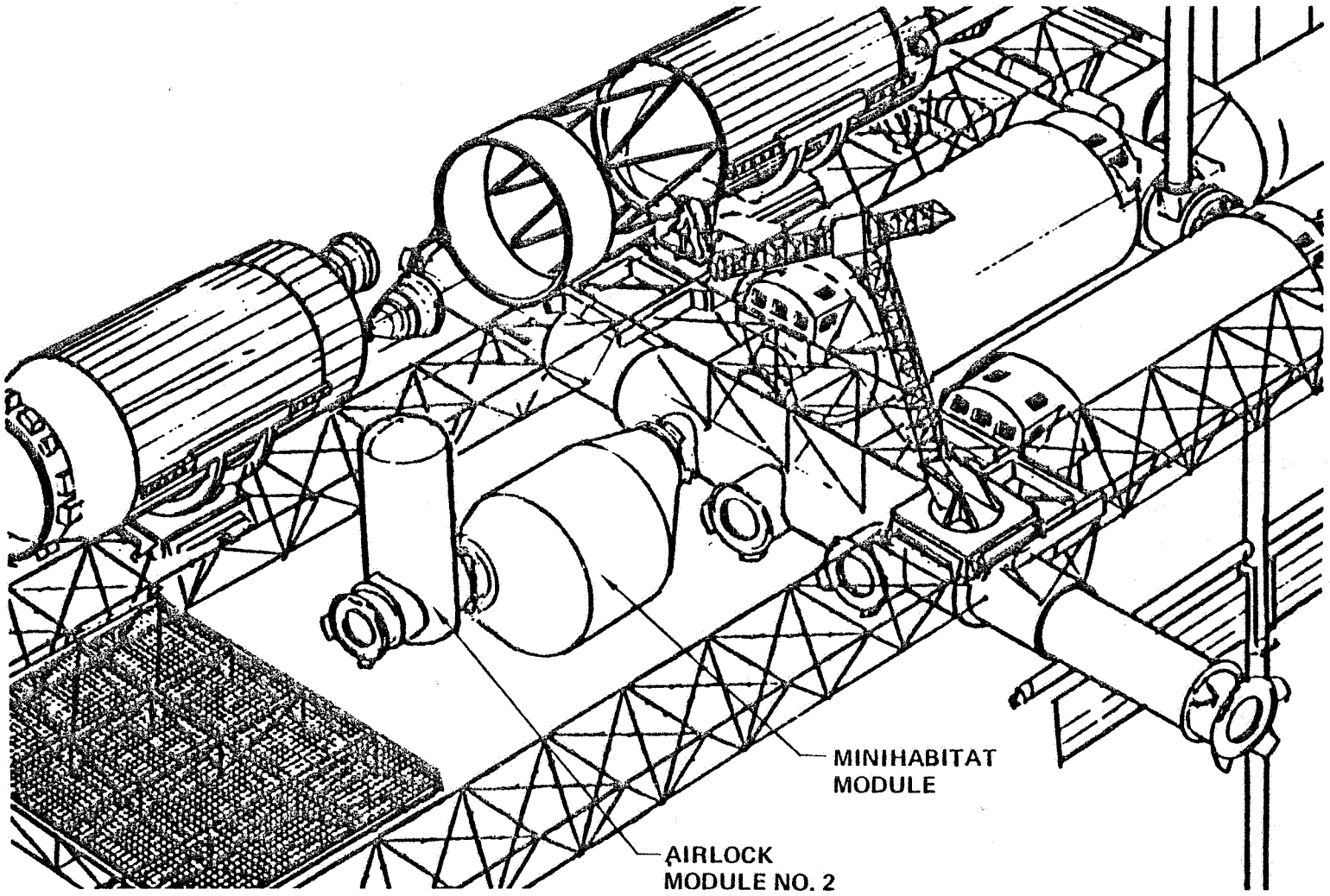

820063-54

LOGISTICS MODULE LIMITATION

The logistics requirements vs. the Logistics Module capacity were compared and it was found that there was a substantial incompatibility. The reference Logistics Module pressurized storage volume is fully booked so there is no excess capacity to serve potential experimental users. The facing chart shows the potential workarounds.

One option would be to lengthen the reference Logistics Module. It was found in our payload manifesting analysis that the eight meter Logistics Module length was critical in allowing many co-manifesting opportunities. We have not conducted a sensitivity analysis to show co-manifesting vs. Logsitics Module length so we cannot state with certainty what other length of Logistics Modules would be feasible. However, it would probably be prudent to stick with the eight-meter long Logistics Module for now.

As long as the combined user logistics are less than 115 ft^3, then the resupply could be provided by the available Orbiter mid-deck storage volume.

When the extra logistics volume exceeds 115 ft^3, there are another three options. One option would be to increase the frequency of Logistics Module deliveries to accommodate the extra demand. The second option would be to require the experimental users to supply their own SOC-compatible resupply module (either another Logistics Module or some dedicated module). The third option is to redesign the Logistics Module to achieve a larger payload volume within the eight-meter length. The facing chart shows a new Logistics Module design that provides a total of 964 ft^3 of pressurized storage as compared to the approximately 700 ft^3 available in the reference concept. This additional 264 ft^3 volume is adequate to cover the potential user logistics.

SPACE OPERATIONS CENTER

NASA

Logistics Module Limitation Potential Workarounds

BOEING

SOC-1295

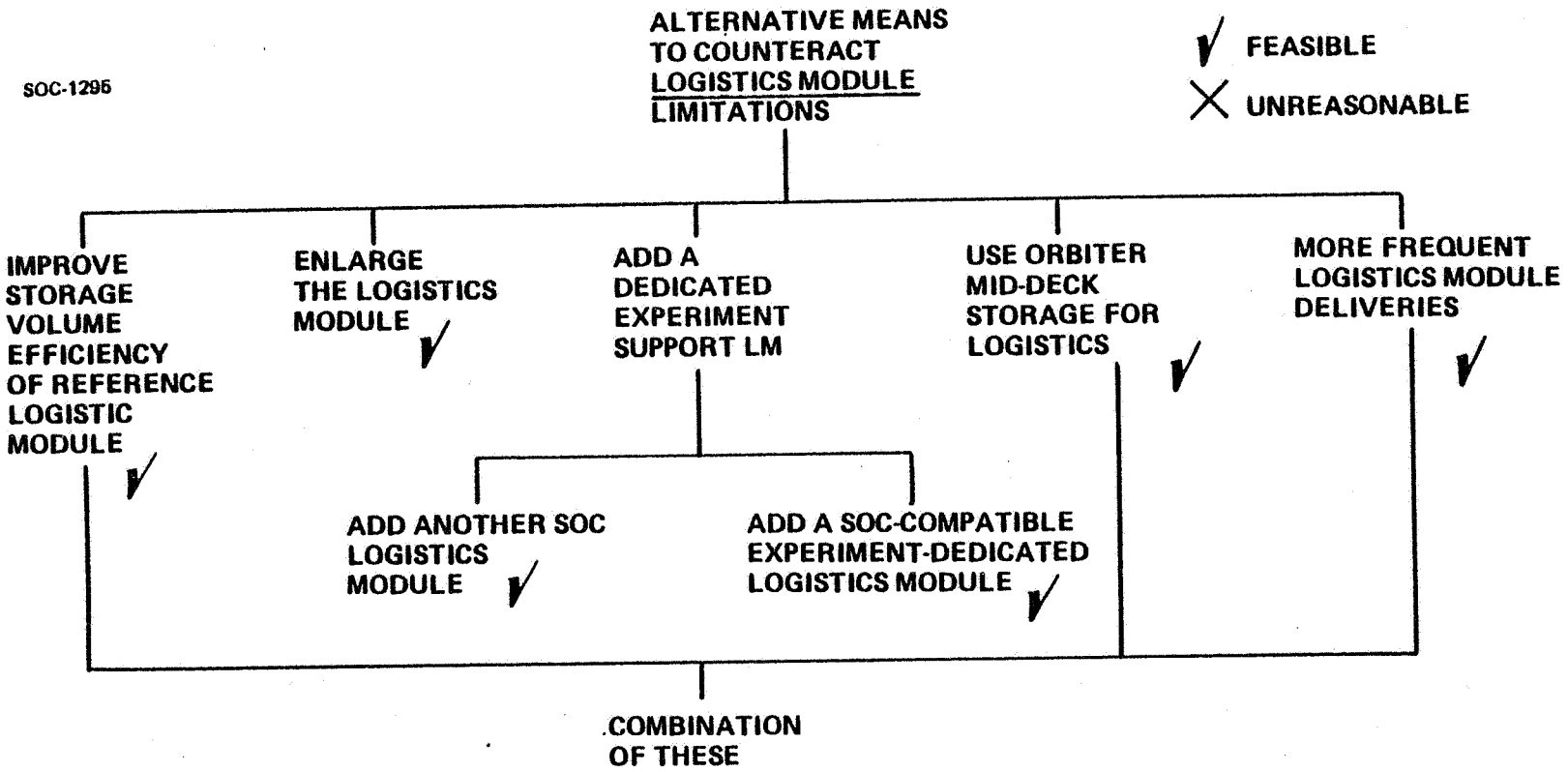

820063-059

SPACE OPERATIONS CENTER

New Logistics Module Concept

NASA BOEING

SOC-1476

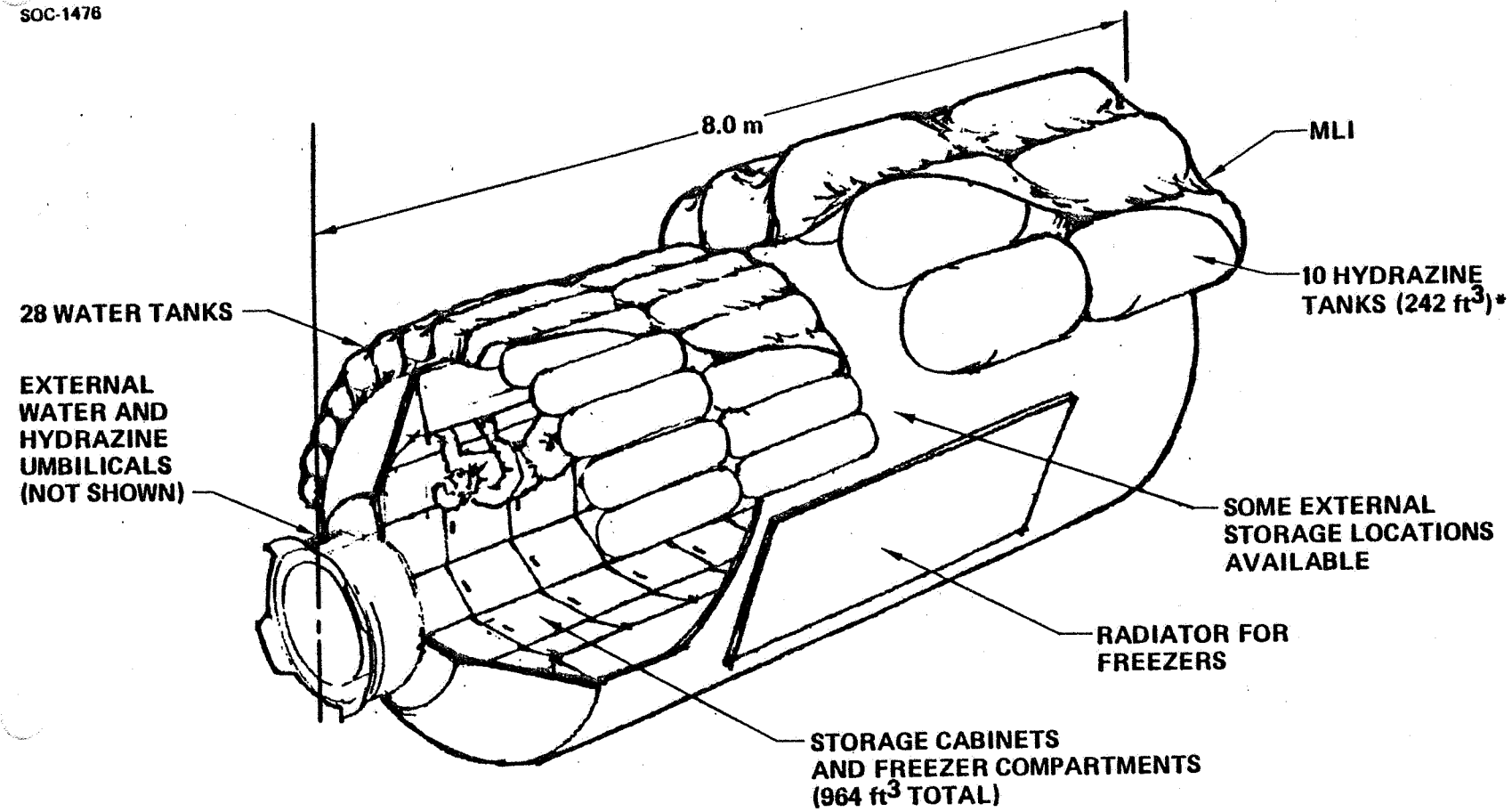

*Includes blow-down provisions

820063-53

ELECTRICAL POWER LIMITATIONS

The electrical power requirements vs. the electrical power available were compared and a substantial incompatibility was found. It was shown that at the B.O.L. of the solar array that the SOC could support up to 17.82kw of experimental load. However, this degraded to essentially zero within four years. The facing chart shows the alternative workarounds.

The recommended alternative is to use higher efficiency, slower degrading solar cells. The reference design utilized a conservatively - projected SEPS - technology solar array. A second look at these projections resulted in a more optimistic projection in the expected state-of-the-art of solar array technology. This more optimistic projection is shown in the following chart as the "Improved Design". (It should be noted that the total array area has been kept the same as there was no additional packaging space available to increase the array area even a little bit).

SPACE OPERATIONS CENTER

NASA

Electrical Power Limitation Potential Workarounds

BOEING

SOC-1296

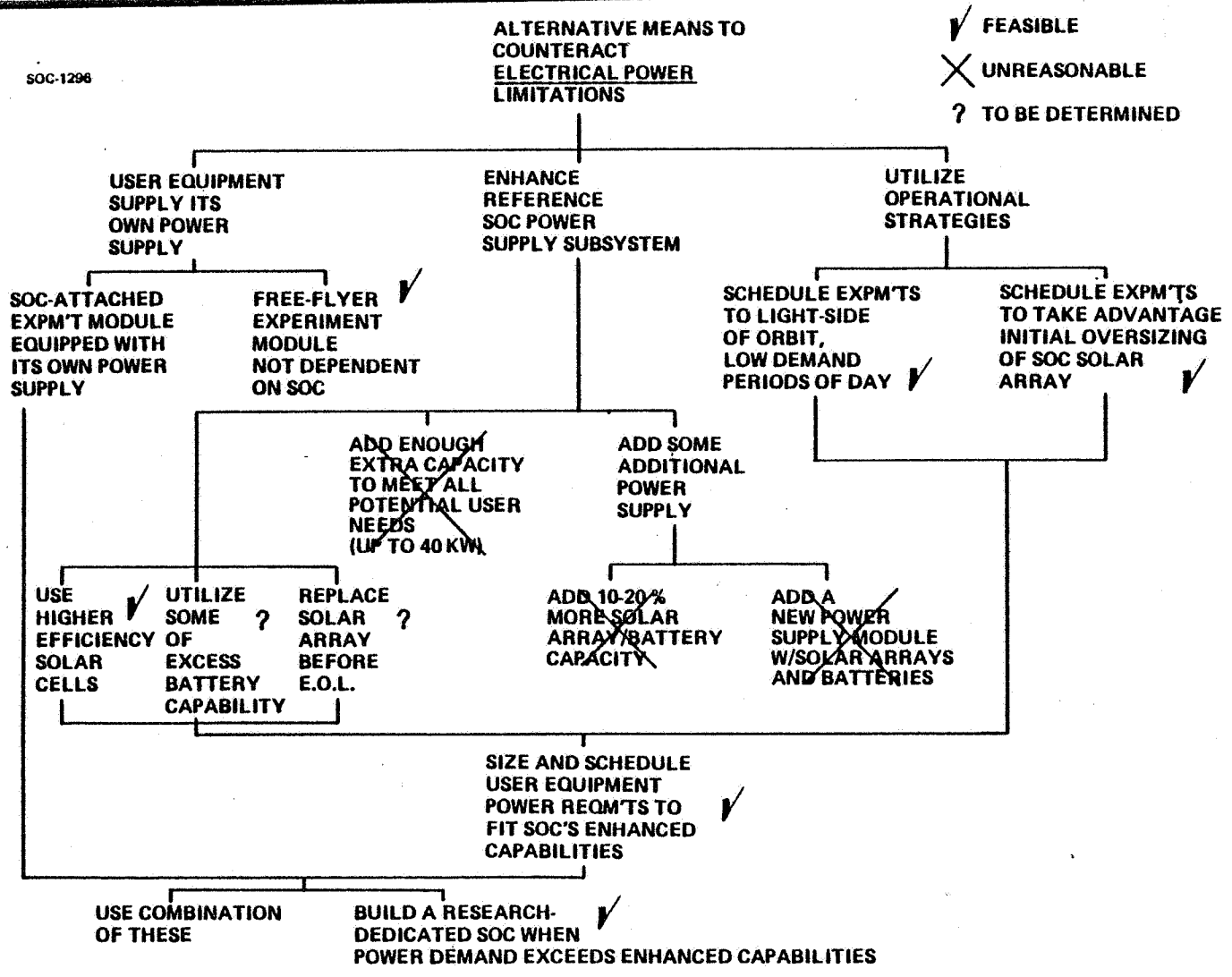

820063-058

OPERATIONAL SOC ELECTRICAL POWER WITH IMPROVED SOLAR ARRAY

When the "Improved Design" solar array data is plotted, see facing page, we see that up to 22.6kw of light side power is available at B.O.L. The dark-side power available would be 16.5kw at B.O.L. The sustained power that could be delivered would be 19.2kw at B.O.L. Again, these power levels decrease exponentially with time (at a slower rate than was the case for the reference concept), so that after four years the power available for the users approaches the 5kw of end-of-life (E.O.L.) extra power derived from the higher efficiency solar array. The sustained load at the E.O.L. could be 6.4kw.

SPACE OPERATIONS CENTER

Operational SOC Electrical Power With Improved Solar Array

NASA

BOEING

SOC-1488

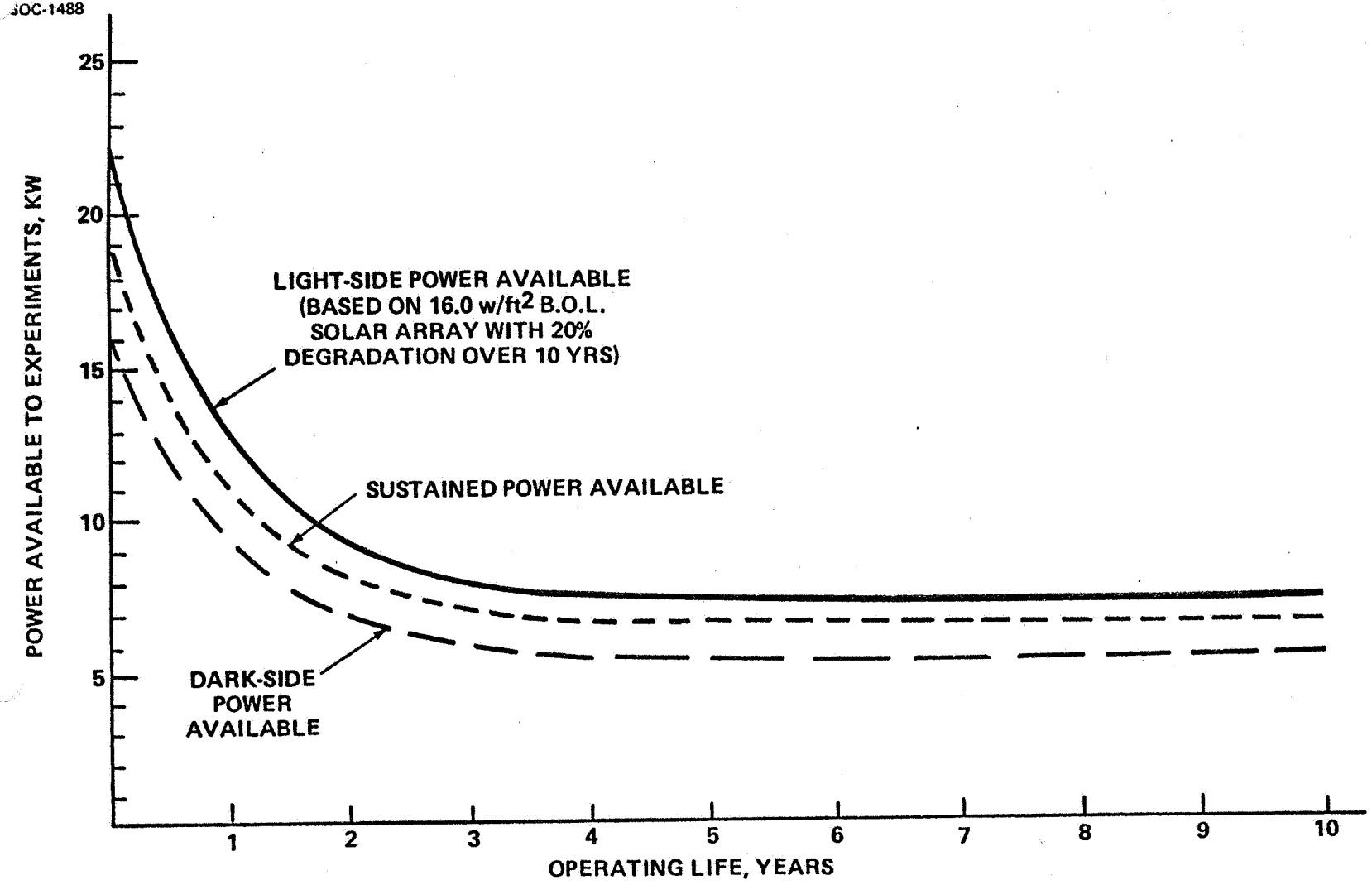

820063-056

EXPERIMENT LOAD ACCOMMODATION WITH PEAK DURING SUNLIGHT

It is feasible to get higher levels of power over short periods of time (½ hour or less) under the following conditions:

A. The batteries can provide some power output to supplement the solar array power output if battery recharge can be accomplished over several orbits. The facing chart shows that high level experiment loads can be accommodated for the load on the battery or on the array within the first 3-4 years for the reference array or the improved array.

B. The higher load will not be operated for long periods, or the higher load can be interrupted, or the higher load can be lowered occasionally so that the batteries can be recharged.

C. Wire sizes would have to be increased on additional cables added to accommodate the large currents.

SPACE OPERATIONS CENTER

Experiment Load Accommodation With Peak During Sunlight Portion of Orbit

NASA BOEING

SOC-1489

REFERENCE S.O.C. AT L.E.O. WITH IMPROVED SOLAR ARRAY AND 20% DEGRADATION IN 10 YEARS

ONLY APPLICABLE WITHIN FIRST 1/3 LIFE OF ARRAY

NOTE: CAN ALSO BE APPLIED TO REFERENCE ARRAY, EXCEPT RECHARGE WILL TAKE A SLIGHTLY LONGER PERIOD

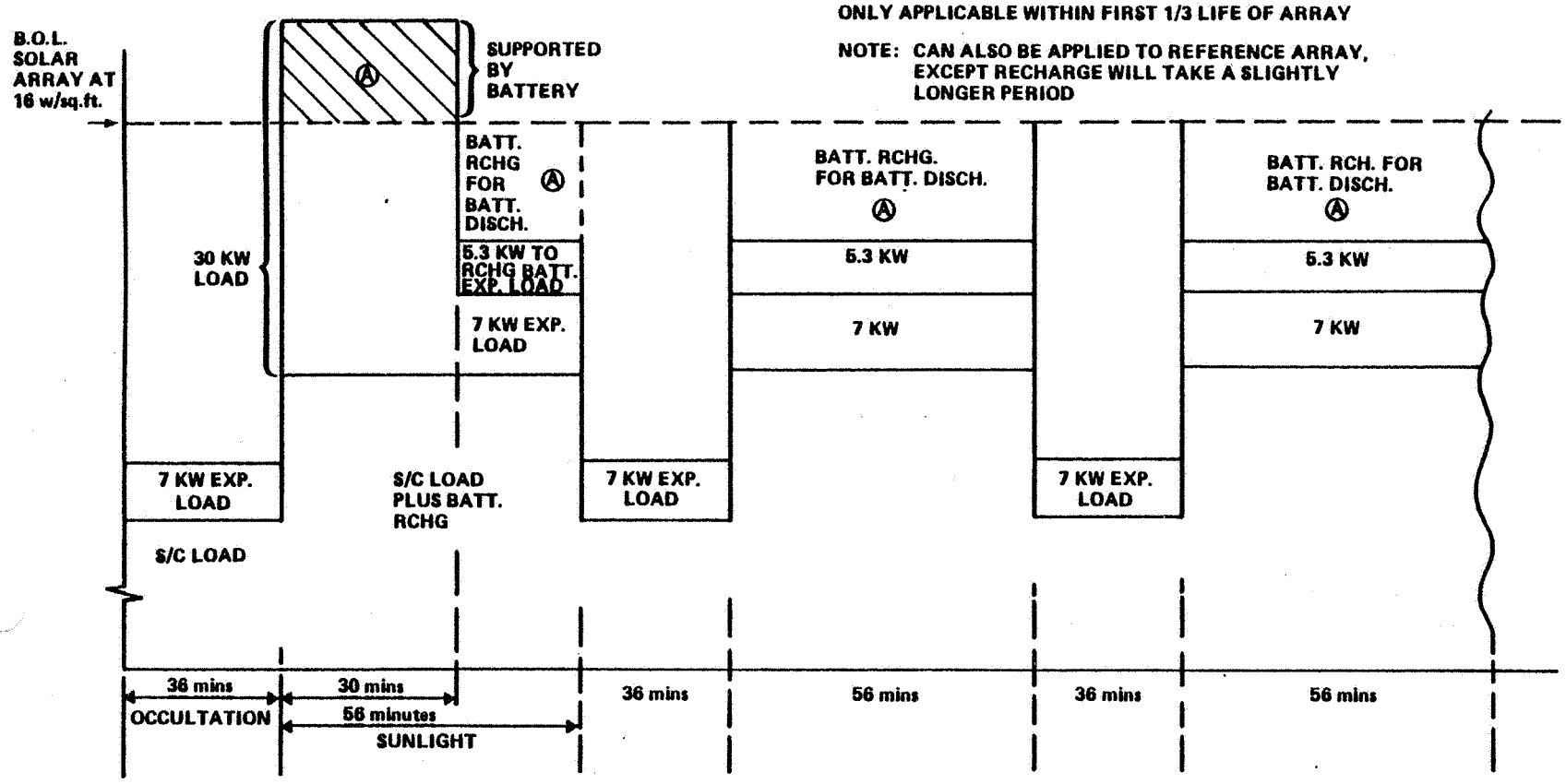

820063-066

THERMAL CONTROL LIMITATIONS

The comparison of the thermal control user requirements to the SOC capabilities showed some incompatibilities. It was seen that there is adequate thermal rejections capability available for any of the specific experiments or modules. However, when several of these must be accommodated simultaneously, the SOC will not be able to provide the necessary heat rejection capability. The facing chart lists the potential workarounds. The recommended workaround concept involves a combination of several of the alternatives shown in the figure.

During the early years of SOC, the experiments would be sized and scheduled to fit the available SOC capabilities. This scheduling would 1) include defining selected experiment combinations that could be conducted at any specific time, and 2) would include a time of day/month/year scheduling strategy to take advantage of the cyclical excess thermal rejection capability of the SOC system.

When the research community decides that they need dedicated research modules, it will be necessary for them to provide radiators on these modules.

SPACE OPERATIONS CENTER

Thermal Control Limitation Potential Workarounds

NASA

BOEING

SOC-1486

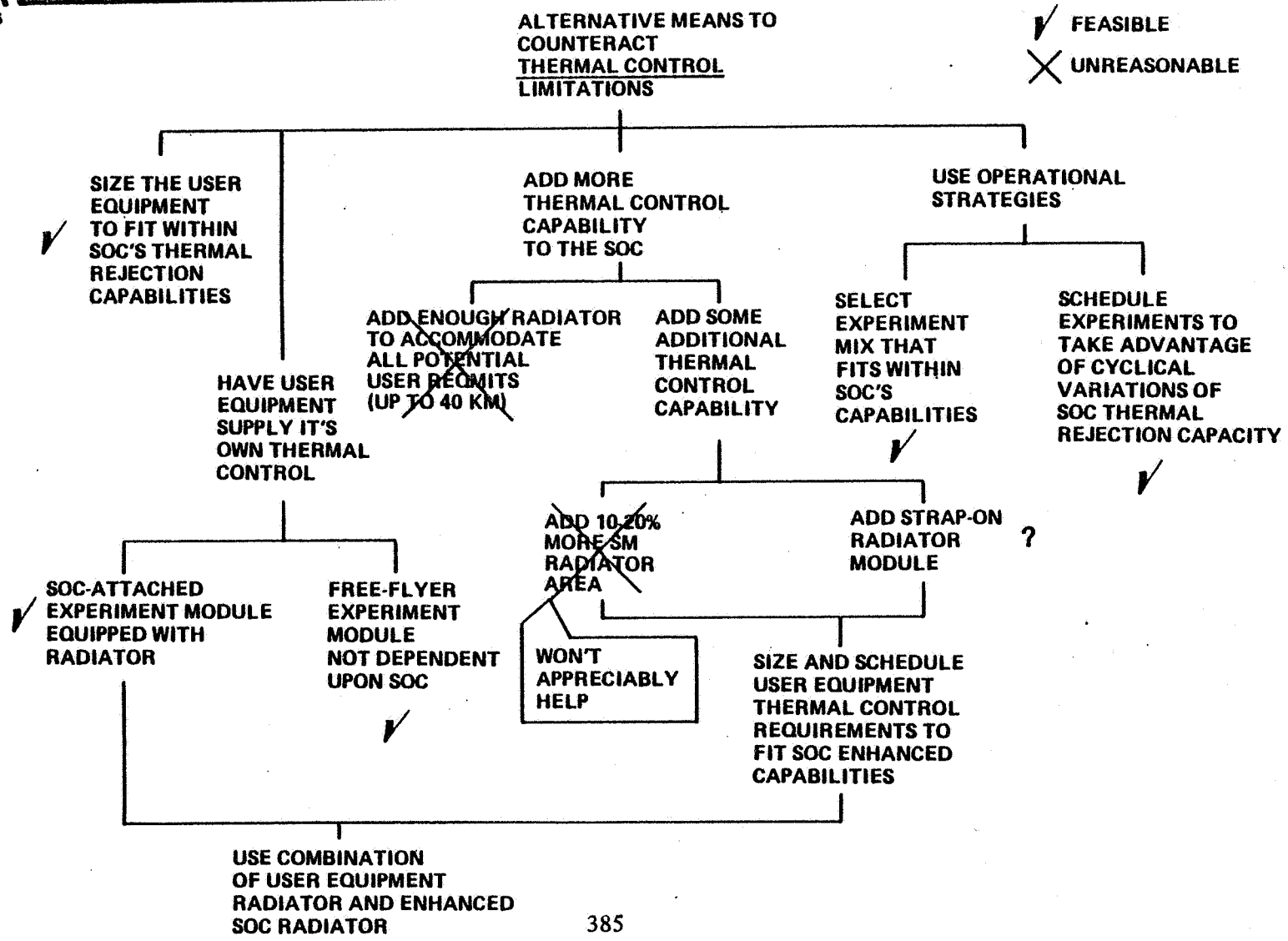

820063-057

INSTALLATION LOCATIONS FOR RESEARCH MODULES

The facing chart shows where the research modules could be installed on the SOC. Also shown is the preferred location for the Mini-Habitat Module.

SPACE OPERATIONS CENTER

Installation Locations for Research Modules

NASA BOEING

SOC-1487

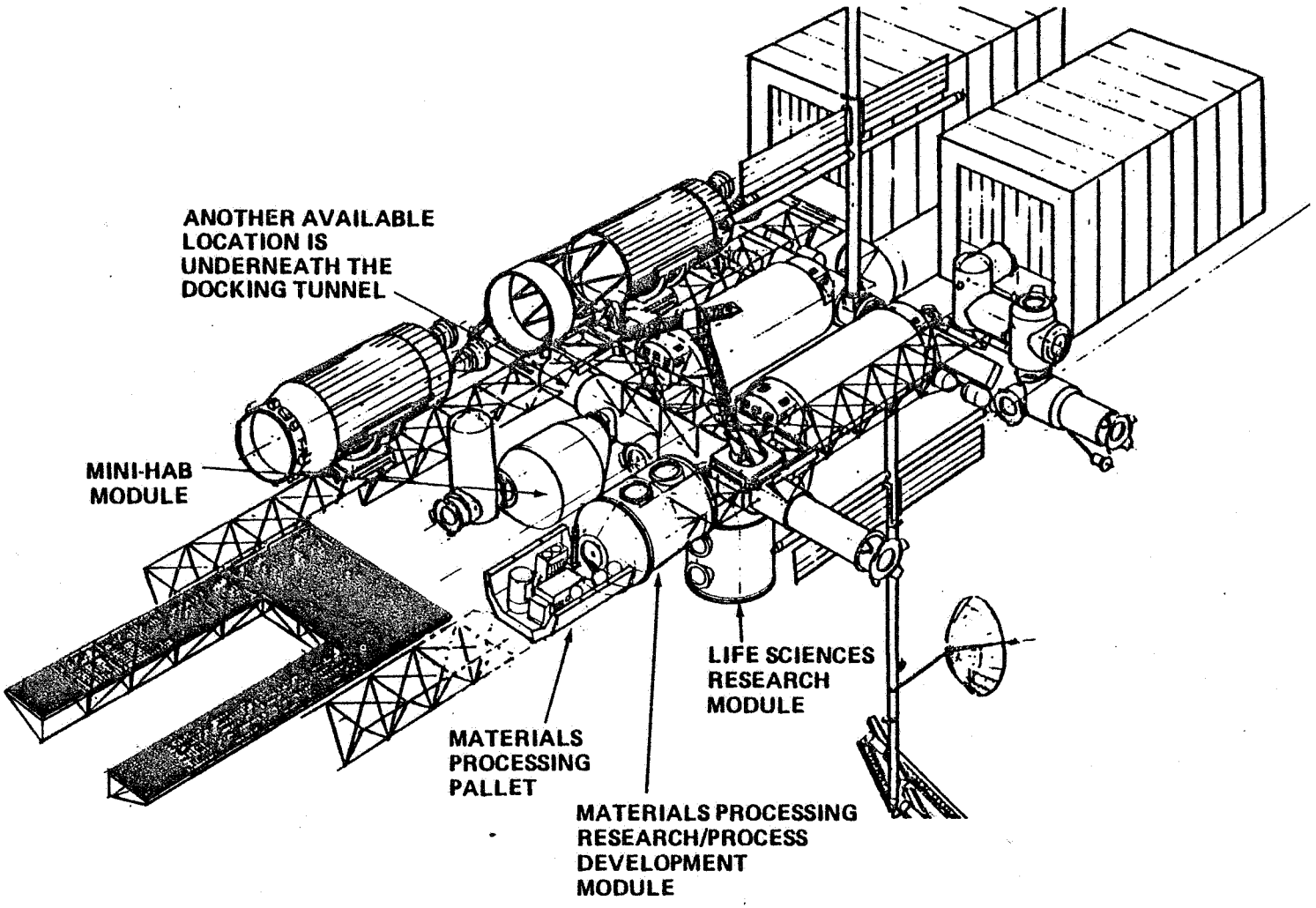

820063-060

Flight Operations

POTENTIAL TYPES OF VEHICLES TO BE OPERATIONALLY INTERFACED WITH SOC

The facing chart shows the variety of space vehicles that may interface with the SOC. There will be three primary vehicle types—the Shuttle Orbiter, Orbital Transfer Vehicles (OTV's), and a Teleoperator (TMS). A fourth class, Shuttle Derived Vehicles (SDV's), is also a distinct possibility.

As the figure illustrates, there are two basic classes of OTV concepts: ground-based OTV's or space-based OTV's. It is unclear at this point in time as to whether or not a ground-based OTV would precede the space-based OTV. There are three mutually exclusive OTV concepts that have been studied during this study: aerobraked OTV's, non-aerobraked OTV's, and 1½ stage OTV's. The SOC operations involving these space-based OTV's were discussed at the Midterm Briefing. Which, if any, of these OTV's will eventually be used is still an open question. The aerobraked OTV appears to be the most promising concept.

SPACE OPERATIONS CENTER

NASA

BOEING

Types of Space Vehicles Interfacing With SOC

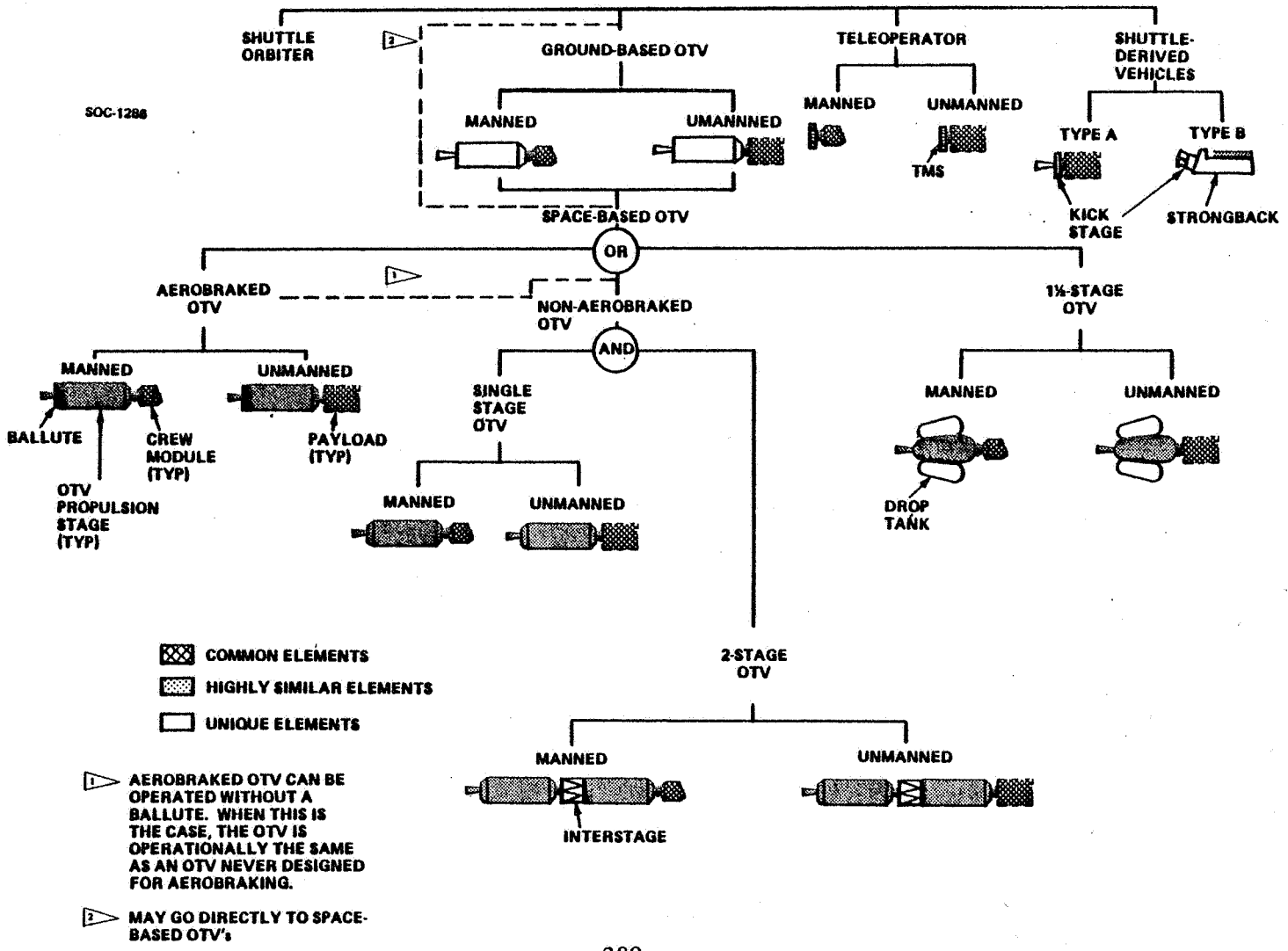

SOC FACILITIES/MODULES/EQUIPMENT/ APPLICABLE TO VARIOUS SPACE VEHICLES

The SOC configurations and sub-elements described in the System Description Document reflect the results of these operations analyses. As the facing chart shows, various combinations of these sub-elements can be adapted to any of the OTV concepts. In only one case has it been found necessary to significantly alter the SOC flight support facility configuration to adapt to the OTV configuration—the 1½-stage OTV using three or four drop tanks requires an additional Docking Tunnel.

SPACE OPERATIONS CENTER

NASA

SOC Facilities, Modules, and Equipment Applicable to Various Space Vehicles

FO3

BOEING

SOC-1379

VEHICLE \ FACILITIES/MODULES/ SUPPORT EQUIP. REQ'D	SERVICE MODULE DOCKING PORTS	DOCKING TUNNEL DOCKING PORTS	HANGAR – NO MAINT PROVISIONS	HANGAR – MAINT PROVISIONS	TRACK NETWORK OPERATIONAL SOC	GROWTH SOC CONFIGURATION	GROWTH SOC CONFIGURATION WITH ADDITIONS	GROWTH SOC CONFIGURATION PLUS ANOTHER DOCKING TUNNEL	VEHICLE/MODULE TRANSPORTERS	UMBILICAL SYSTEM – IN HANGAR	UMBILICAL SYSTEM – ON PIER	STORAGE FACILITY PLATFORM AREA	EXPANDED PLATFORM AREA	PAYLOAD STORAGE AREA	PROPELLANT STORAGE/TRANSFER SYSTEM	AIRLOCK MODULES AM-1	AIRLOCK MODULES AM-2	PORTABLE IVA TUNNEL	MOBILE CHERRYPICKER AND HANDLING TOOLS	BALLUTE/ENGINE TRANSPORTER	CREW MODULE
ORBITER	●	●			●	●								●					●		
TELEOPERATOR – UNMANNED					●	●			●		●			●					●		
TELEOPERATOR – MANNED						●			●		●			●					●		●
GROUND-BASED OTV – UNMANNED			●		●				●		●			●					●		
GROUND-BASED OTV – MANNED			●			●			●		●			●		●	●	●	●		●
AEROBRAKED OTV – UNMANNED				●	●	●			●	●	●	●		●	●				●	●	
AEROBRAKED OTV – MANNED				●		●			●	●	●	●		●	●	●	●	●	●	●	●
SINGLE STAGE OTV – UNMANNED				●	●	●			●	●	●	●		●	●				●	2	
SINGLE STAGE OTV – MANNED				●		●			●	●	●	●		●	●	●	●	●	●	2	●
2-STAGE OTV – UNMANNED				●	●	●			●	●	●	●		●	●				●	2	
2-STAGE OTV – MANNED				●		●			●	●	●	●		●	●	●	●	●	●	2	●
1½-STAGE OTV – UNMANNED				●	●	●		● 1	●	●	●	●		●	●				●	2	
1½-STAGE OTV – MANNED				●		●		● 1	●	●	●	●		●	●	●	●	●	●	2	●
SHUTTLE DERIVED VEHICLE – TYPE A							●						●	●					●		
SHUTTLE DERIVED VEHICLE – TYPE B							●						●	●					●		

1 REQ'D FOR 3 AND 4 DROP TANK VERSIONS ONLY

2 TRANSPORTER CONFIGURED FOR ENGINE HANDLING ONLY

820063-43

SOC/SHUTTLE OPERATIONS

The most frequent SOC operational events are those associated with Shuttle arrival and departure and OTV operations. Accordingly, the operational interfaces between the SOC and the Space Shuttle are important.

Five distinct functions were identified for SOC/Shuttle operations.

1. **Shuttle arrival** will involve a cooperative activity between the Shuttle pilots and the SOC IVA operator (operations controller) to accomplish Shuttle terminal rendezvous and preparation of the SOC for the docking operation and accomplishment of the docking or operation using a Shuttle-active SOC passive mode.

2. **Shuttle payload unloading** at the SOC. Payloads will be unloaded from the Shuttle payload bay and parked at SOC berthing ports or payload storage facilities using the Mobile Cherrypicker. This activity may involve handling several payloads, including the possibility of loose parts shipped separately in containers for installation on the payload at the SOC as part of a construction process. Other payloads that may be handled include Orbit Transfer Vehicles, other upper stages, crew modules, experiment pallets, research and applications modules, and SOC modules or equipment.

3. **Shuttle reload** for return to Earth. Certain Shuttle/SOC missions involve return of payloads to Earth. These may include experiment pallets or science and applications modules as well as spacecraft payloads, upper stages, crew modules or SOC equipment. In this case, the requisite payload element must be installed in the Shuttle payload bay using the Mobile Cherrypicker and secured for reentry and landing.

4. **Propellant transfer.** For those instances in which the Shuttle is used as a propellant tanker to bring up propellant for a space-based upper stage propellant transfer must be used to transfer the propellant from the Shuttle to the SOC storage tanks. This is also the case where a short mini-tanker is used to allow co-manifesting of payloads and the short tanker. The manifesting analysis indicates that most of the Shuttle flights to the SOC will involve this short tanker with co-manifested payloads.

   The first step in propellant transfer operations will be the actuation of an SOC swing arm and mating of an umbilical plate at the end of the swing arm with an umbilical plate on the Shuttle propellant tanker to prepare for propellant transfer. Propellant transfer will then be initiated using whichever transfer means is eventually selected as most efficient and cost-effective. At the completion of the transfer, the umbilicals will be demated and the Shuttle prepared for departure.

5. **Shuttle departure** will begin with preparation of the SOC and Shuttle for the departure operations. Shuttle systems will be powered up and their flight control and data management systems activated for Shuttle flight operations. Separation will occur under the cooperative monitoring of the SOC operations controller and the Shuttle pilots. Following initial separation maneuvers using RCS burns, the Shuttle will conduct a normal deorbit burn reentry and landing.

SPACE OPERATIONS CENTER

NASA

BOEING

Shuttle Operations Analysis Results

- Shuttle operations defined during initial SOC system analysis study

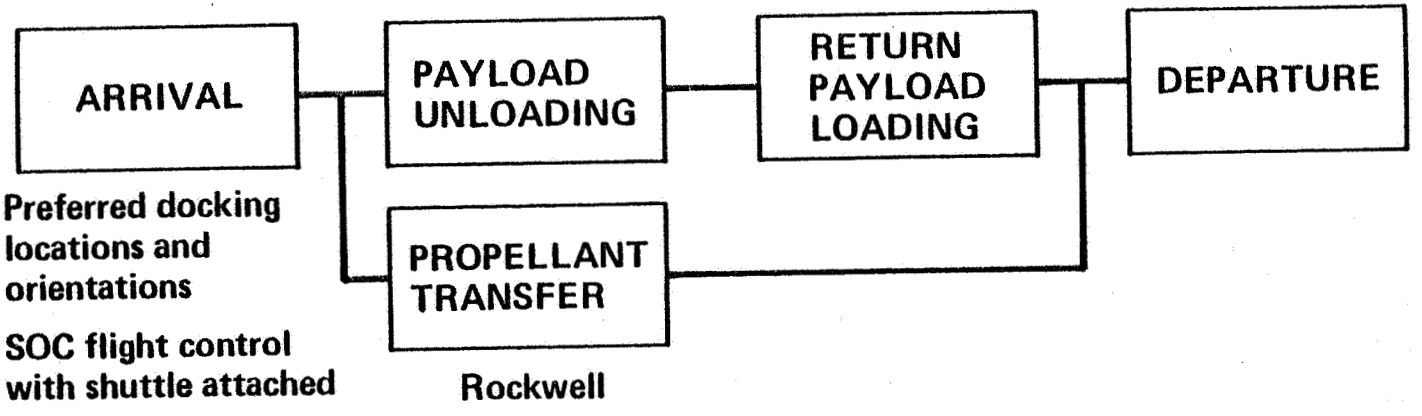

- Preferred docking locations and orientations
- SOC flight control with shuttle attached
- Plume impingement
- Rockwell
  - RMS berthing
  - Runaway jets
  - Approach paths

- Defined crew skills, equipment, and procedures required for shuttle operations

820063-041

DOCKING OPERATIONS ISSUES

Three issues have been identified associated with Shuttle docking operations. The first is selection of docking, or berthing aided by the Shuttle RMS, as the preferred mode. Rockwell analyses and simulations indicated that with suitable software changes, RMS berthing could be used as the normal mode. In view of the issues to be discussed below, RMS berthing is recommended as the preferred mode of operations.

The second issue involves issues of flight control stability and Shuttle runaway jets. A Rockwell analysis of the runaway jet situation indicated that for normal docking operations a runaway jet could be handled by operating the Shuttle thrusters in a high-z mode. This, however, creates a significant plume impingement problem on the Space Operations Center, to be discussed below.

Flight control stability considerations dictate that when the Shuttle is docked to the Space Operations Center, the two flight control systems not be simultaneously active. A feasible sequence would be one in which the Space Operations Center flight control system is deactivated a few seconds before docking contact. The very large inertias of the Space Operations Center will prevent appreciable movement during this short period. Following docking contact and positive latch engagement, the Shuttle attitude control system can be deactivated and the SOC attitude control system reactivated. Just prior to Shuttle departure separation, the reverse procedure can be followed with the SOC system first deactivated then the Shuttle system activated preparatory to firing RCS thrusters for the separation maneuver. Following Shuttle separation, the SOC flight control system can be reactivated.

Plume impingement poses issues of thermal control system contamination and imposition of loads on flexible parts of the SOC structure and possible damage to multi-layer insulation coatings. Plume impingement can be minimized by docking the Shuttle to the SOC docking tunnel in a tail up position so that most of the Shuttle thrusters will not cause plume impingement on elements of the SOC. Preferred docking orientations are shown in the facing chart. Orientations may be selected mission-by-mission depending on what spacecraft, construction projects, experimental facilities or transportation system elements happen to be located at the SOC for that particular mission. A second orientation minimizing impact would be docking to the Service Module ports with Shuttle tail down. In this case, plume impingement would be primarily on the OTV hangars. They are designed to accept plume impingement and protect anything stored inside the hangar from the effects of plume impingement.

The concern about loads imposed by plume impingement deals primarily with the large solar arrays. Two work-arounds are suggested for minimizing this problem. The first is to feather the solar arrays relative to the expected plume impingement flow during the docking or berthing procedure. The second is to provide a clutch mechanism in the solar array beta-tilt drive so that if loads exceed the normal design capability of this joint the solar arrays will flex or hinge away from the impinging plume and minimize the impingement loads.

SPACE OPERATIONS CENTER

Preferred Shuttle Docking Locations and Orientations

NASA JC-1474

BOEING

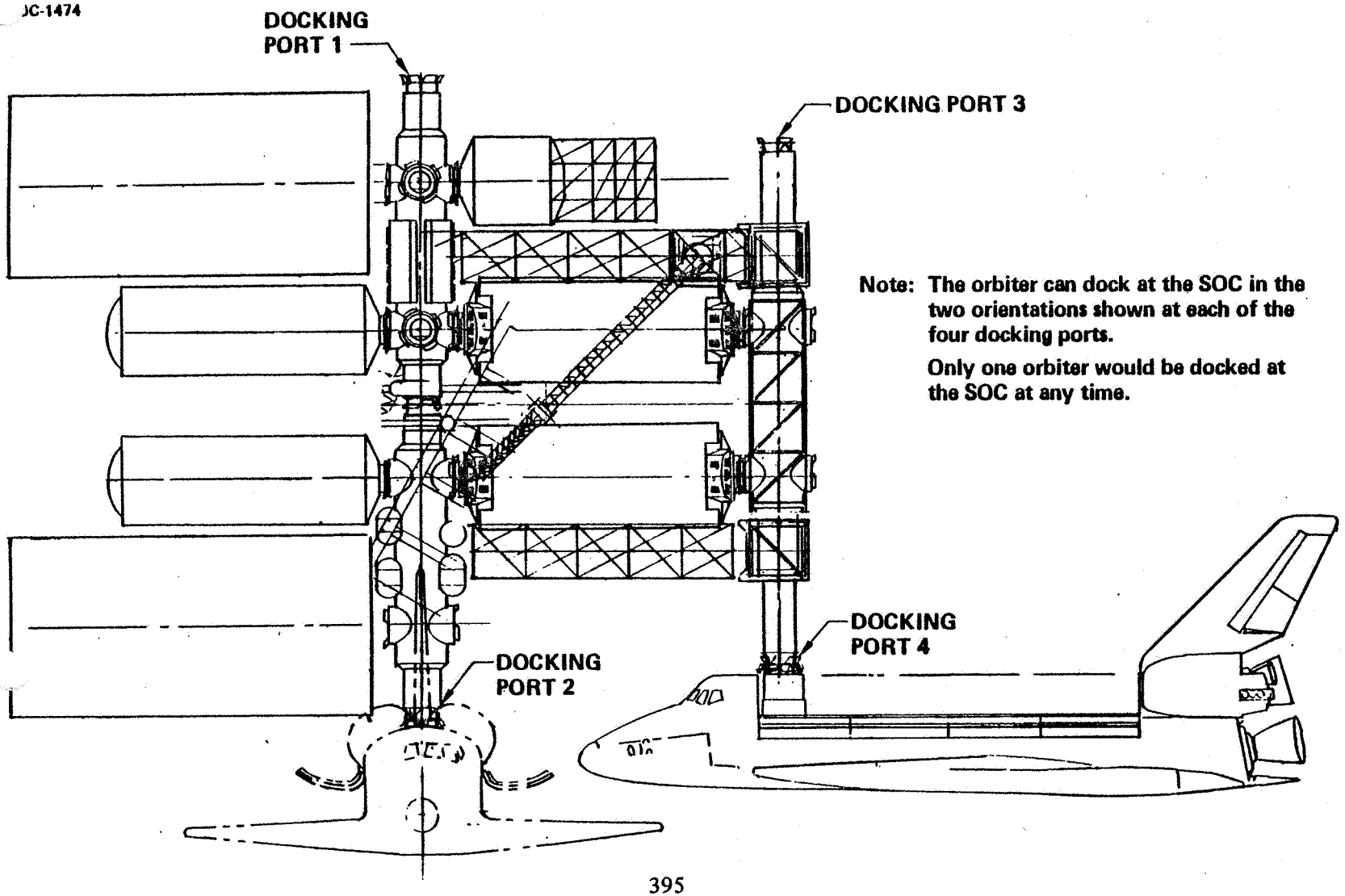

Note: The orbiter can dock at the SOC in the two orientations shown at each of the four docking ports.

Only one orbiter would be docked at the SOC at any time.

820063-44

PAYLOAD ACCOMMODATIONS AND LENGTH

Examination of the manifesting analysis results indicates that utilization of the maximum available Shuttle payload bay length is normally desirable. Many opportunities exist for manifesting two moderate-sized payloads with the short tanker. The following chart illustrates the short tanker concept, showing space available for payloads with a docking/berthing/airlock fixture located in the forward part of the payload bay.

Some of the manifesting opportunities exceed the Shuttle payload bay length available, if the docking and airlock module is located within the payload bay. Approximately one meter of additional payload bay length could be made available by using an inverted bulkhead on the hydrogen tank of the short tanker, thus permitting a nested tank arrangement. Some manifesting opportunities will still desire the utilization of the full payload bay length. Accordingly, it is recommended that consideration be given to modifying one Orbiter for permanent installation of the short tanker and for installation of a docking and airlock fixture in the Shuttle aft cabin rather than in the payload bay. This configuration would maximize multiple manifesting opportunities. The frequency of Shuttle visits to the SOC is expected to be enough that crew exchange activities normally will not demand cabin accommodations for more than four people.

Examination of the results of the median traffic model operations analysis indicate an average Shuttle visit frequency to the Space Operations Center of approximately 30 visits per year. More than half of these visits would be by a vehicle incorporating the short tanker with co-manifested payloads. Four of the yearly visits would be normal Shuttle crew exchange operations, including the exchange of a resupply module. The Orbiter used for resupply operations could be designed to accommodate up to eight crew in the cabin. The resupply operations are not compatible with the short tanker operation since both the short tanker and the resupply module are similar in size and both must be located in the aft portion of the payload bay to accommodate center of gravity constraints. The frequency of visits of the short tanker configuration will permit visits to the Space Operations Center by experimenters, researchers and other visitors. These people could be accommodated with provisional crew accommodations for periods of two to four weeks and would not normally be allocated private quarters within the SOC.

SPACE OPERATIONS CENTER

NASA

SOC-1498

Shuttle Payload Accommodation and Length

BOEING

Manifesting analysis results:

- Maximum cargo bay length is normally desirable.
- Many opportunities exist for co-manifesting two moderately sized payloads with a minitanker.
- Some payloads required total cargo bay length.
  - Docking tunnel/airlock in the way
  - Consider modifying one orbiter for permanent installation of–

    –Minitanker

    –Airlock/tunnel in aft cabin
- Median mission model shows 30 orbiter visits per year.

  –More than half with minitanker.

  –Logistics module resupply not compatible with minitanker

820063-009

SPACE
OPERATIONS
CENTER

NASA

SOC-1473

Minitanker Concept

BOEING

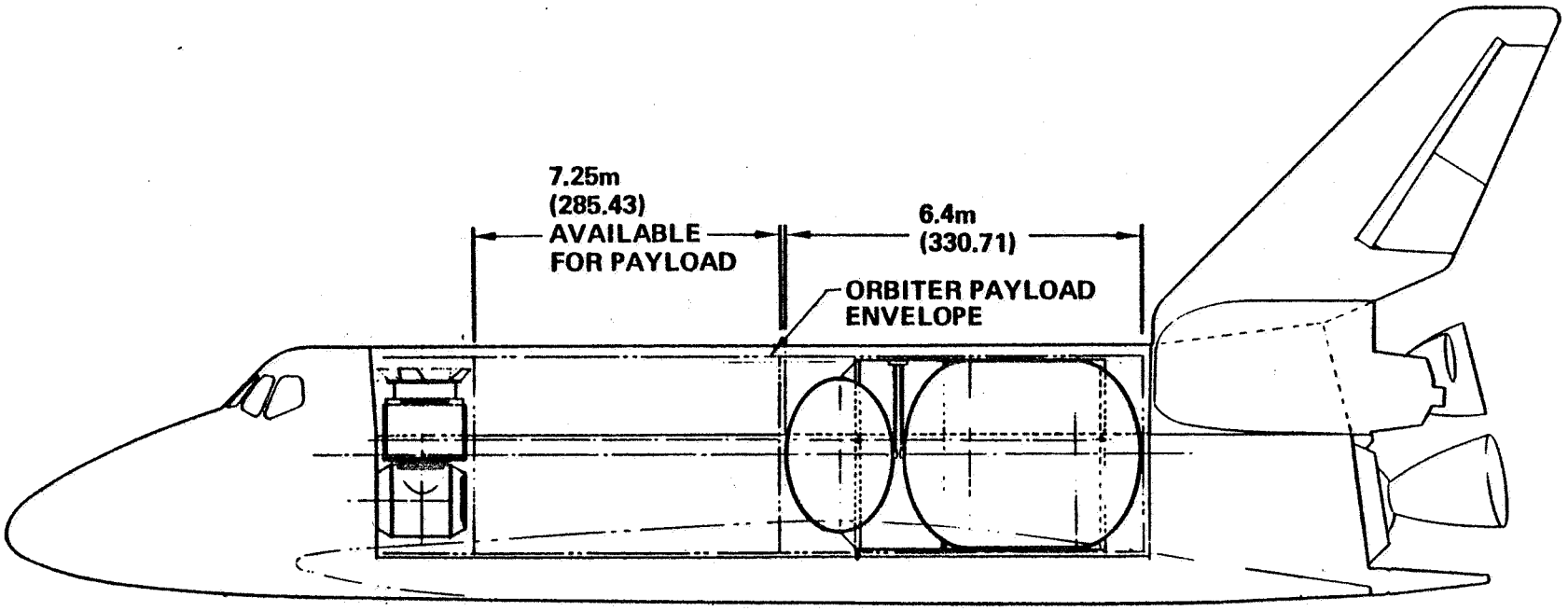

820063-45

SPACE
OPERATIONS
CENTER

NASA
C-1499

BOEING

SOC/Shuttle-Derived Vehicles Operations

820063-010

VEHICLE DEFINITION

Shroud Configurations

The basic configurations for the Boeing and Martin SDV's are shown on the facing page. The Boeing design has the shroud split apart and fall away from the SDV at an altitude of approximately 57 miles. The Martin design has a single piece shroud which separates from the strongback at approximately the same place in the launch sequence as the Boeing design.

In both cases the shroud does not achieve orbital velocity and therefore is not a consideration in SOC operations.

Payload Configurations

There are several payload stowing configurations. The Martin design appears to use Shuttle-type side attach points to stow payloads on the strongback. The Boeing design primarily uses aft attach points to stow the payload on the kickstage. Multiple payloads would be mounted side-by-side in a larger diameter shroud. However, a truss can be attached to the kickstage to provide a strongback for shuttle-type payload attaching.

Propulsion/Avionics (P/A) Module Configurations

Both designs incorporate P/A modules which should be returned to Earth. The Martin design shows a P/A module which can return to Earth on its own power – retrofire, enter the atmosphere, and deploy its own parachutes to softland.

The Boeing design employs a "kickstage" which can only be returned in the Orbiter payload bay.

SPACE OPERATIONS CENTER

Shuttle-Derived Vehicle Concepts

BOEING

NASA

SOC-1470

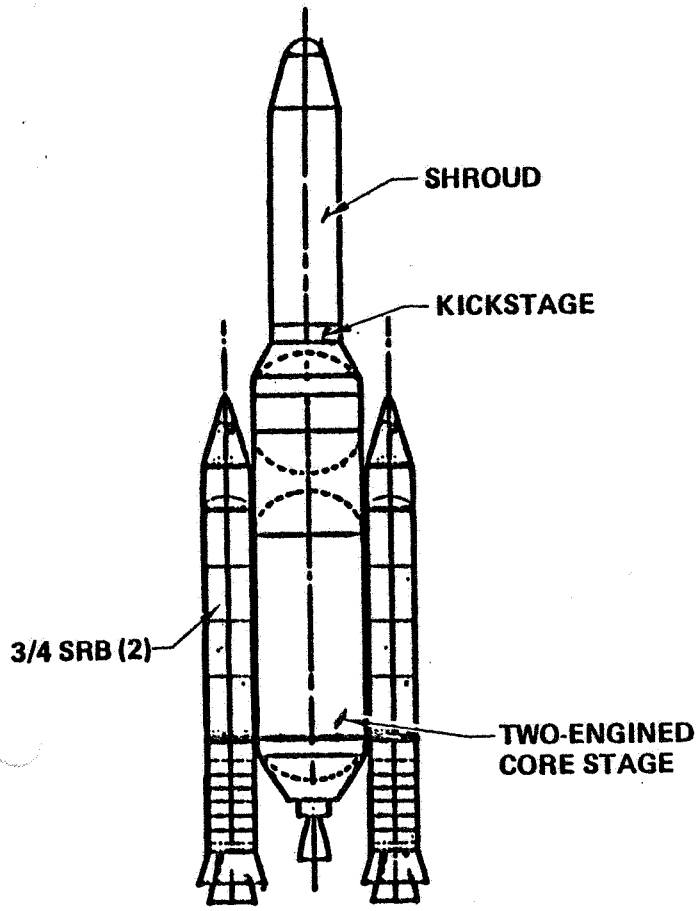

● Boeing SDV concept

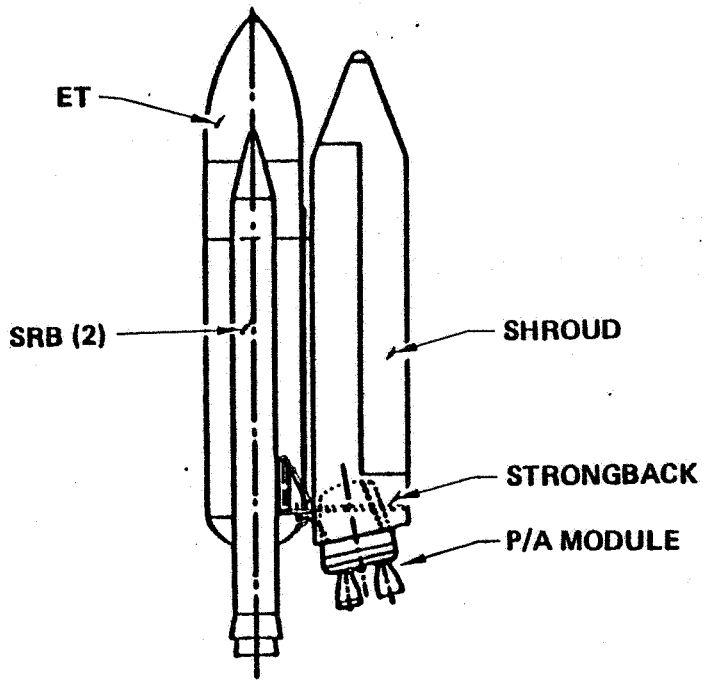

● Martin SDV concept

820063-46

OPERATIONS

Launch Sequence

The flight events for each design are shown in the following pages. It can be seen from these figures that no operational interface will be required with SOC for separation and disposal of the SRB's, the shroud, or the external tank/core stage.

After the SDV achieves orbit it must stationkeep some distance from the SOC. At this point SOC crewmembers will take over operational control for rendezvous and berthing.

SOC Rendezvous

The Martin SDV appears to have an adequate reaction control system to enable it to directly rendezvous with the SOC within reach of the mobile cherrypicker. Provision has been made to locate RCS engines both fore and aft of the payload which would give it sufficient control authority to safely rendezvous.

SPACE
OPERATIONS
CENTER

SDV Flight Events

Martin SDV Concept

NASA

BOEING

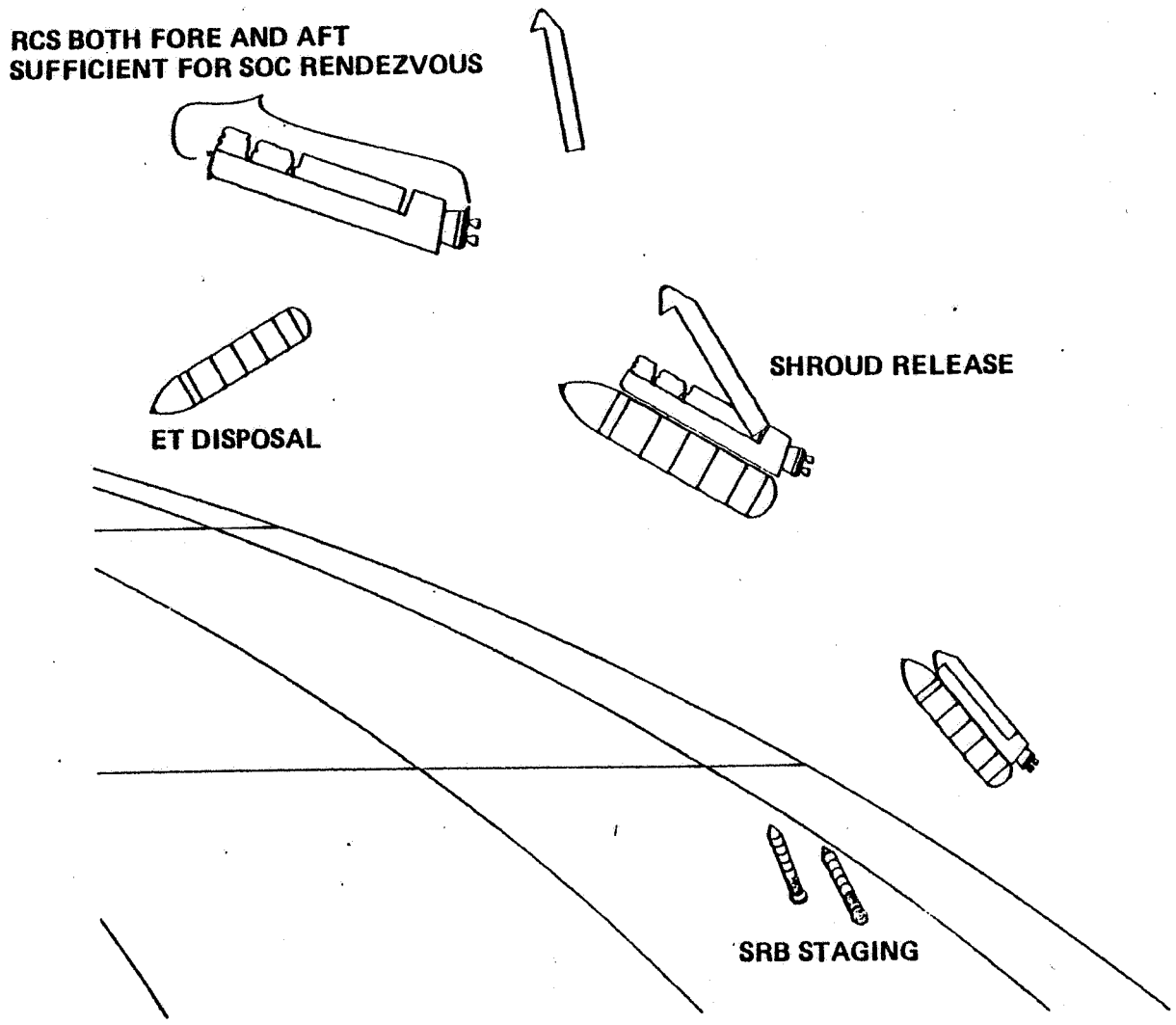

820063-47

The Boeing SDV has reaction control only in the aft-located "kickstage" P/A module. In order to provide sufficient control authority a TMS must be attached to the front of the payload or supporting truss as shown in the facing page. This assembly would then rendezvous with the SOC within reach of the mobile cherrypicker.

SPACE
OPERATIONS
CENTER

SDV Flight Events
Boeing SDV Concept

NASA

BOEING

SOC-1475

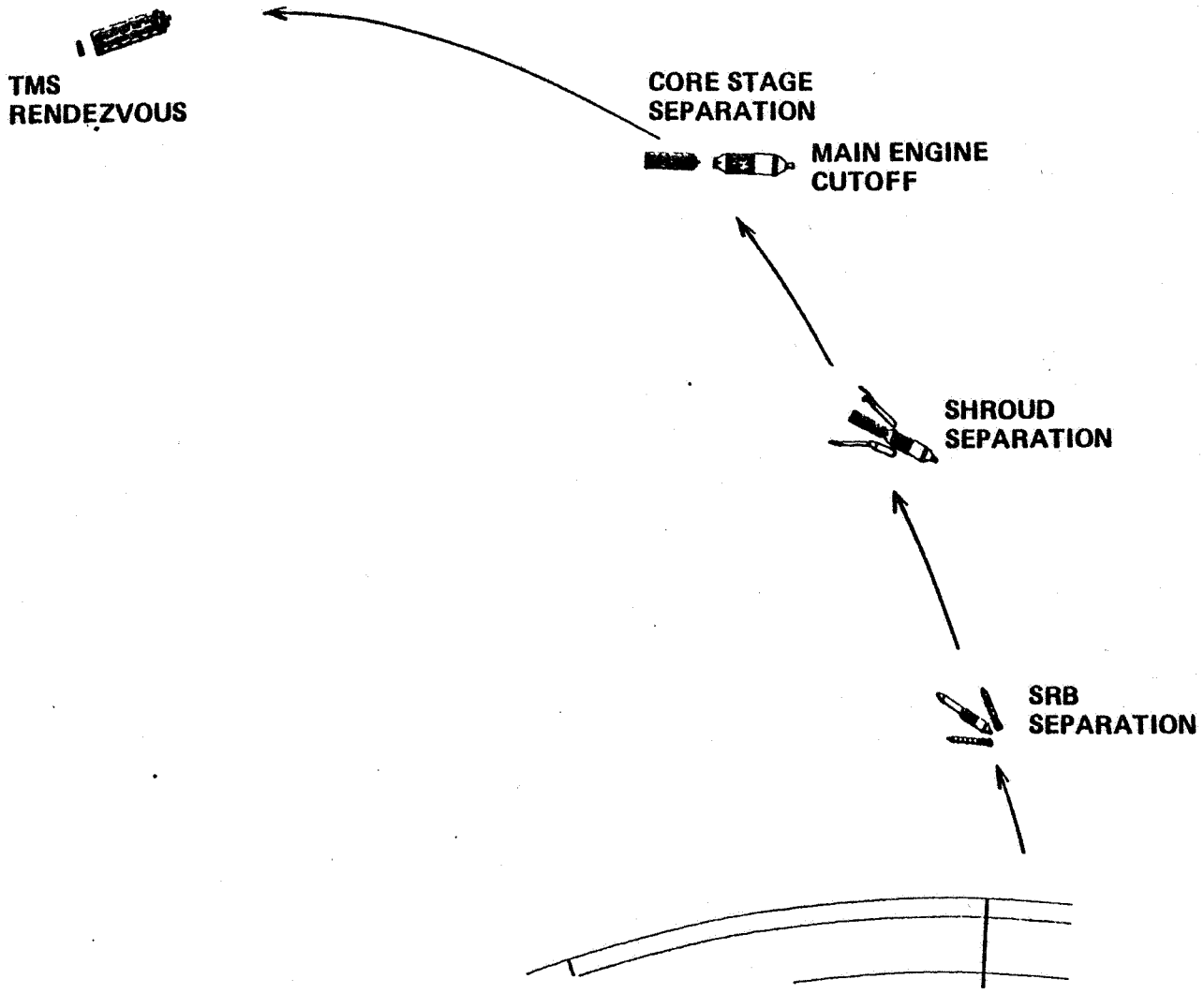

820063-48

OPERATIONS

Berthing

Berthing operations will be accomplished using the mobile cherrypicker. For assemblies where the payload is attached to a strongback or truss the entire truss will be secured to the berthing pier along with the P/A module. For assemblies where the payload is fastened to the "kickstage" only through its aft attach points, only the "kickstage" will be secured to the berthing pier.

Payload Handling & Storage

The payload handling operations for assemblies with a strongback or supporting truss will not require any special equipment or considerations, and will not be markedly different from the payload handling operations used with the Orbiter. Operations involving payloads with only aft attach points may require special considerations to avoid damaging sensitive surfaces. These considerations vary greatly depending on the specific payload.

The side attach payloads may be stored in the present storage area used for shuttle payloads. The aft-attach payloads may be stored and secured on a new grid platform erected adjacent to the new berthing pier.

Propulsion/Avionics Module Operations

The Martin design incorporates a P/A module which can control its descent from orbit. The SOC crewmembers must position the module some distance from the SOC so it may retrofire without concern of plume damage. This positioning operation is the only action the crew members need perform.

The Boeing design incorporates a "kickstage" which must be loaded into the Orbiter cargo bay in similar fashion to any returning payload.

Strongback/Structural Truss Operations

After removing payloads from the supporting structure, the strongback or truss may be disposed of by attaching a TMS to it, and injecting the structure into a rapidly decaying orbital track. It may be determined that some elements of the structure are worth the effort needed to "scavage" and store them at SOC.

SPACE
OPERATIONS
CENTER

SOC and SDV Operations

NASA
C-1483

BOEING

- Boeing SDV
- Martin SDV

(For both SDV concepts, the shrouds are separated and deorbited prior to arrival at SOC)

TMS RENDEZVOUS AND ATTACHMENT OPERATIONS (HAS ONBOARD RCS)

BERTH TO SOC USING MOBILE CP

STOW PAYLOADS ON STORAGE PLATFORM

LOAD KICKSTAGE INTO ORBITER

KICKSTAGE DEORBIT OPERATIONS

PAYLOAD SUPPORT STRUCTURE DEORBIT OPERATIONS

820063-042

NEW SUPPORT FACILITIES

SDV Berthing Pier

A new berthing pier would be needed for SDV operations as shown in the opposite figure. This pier position minimizes collision risk with the standard V-bar approach trajectory. The pier is located at the end of the flight support area, and includes cherrypicker access for SDV payload handling operations. This berthing facility must accommodate one or the other of the two types of SDV's studied; the one shown on the opposite page without a strongback whose only hard attach point is on the kickstage or an SDV with a strongback and hard attach points which span the length.

Aft Attach Payload Storage Area

A separate storage area must be erected in order to accommodate payloads which have aft attach points (instead of shuttle-type side points). This truss and grid construction can be seen in the facing page adjacent to the SDV berthing pier.

SPACE OPERATIONS CENTER

SDV Payload Storage Areas

NASA

BOEING

)C-1421

NOTE: AFT-ATTACH SDV KICKSTAGE-TO-PAYLOAD FIXTURE HAS NOT BEEN DEFINED

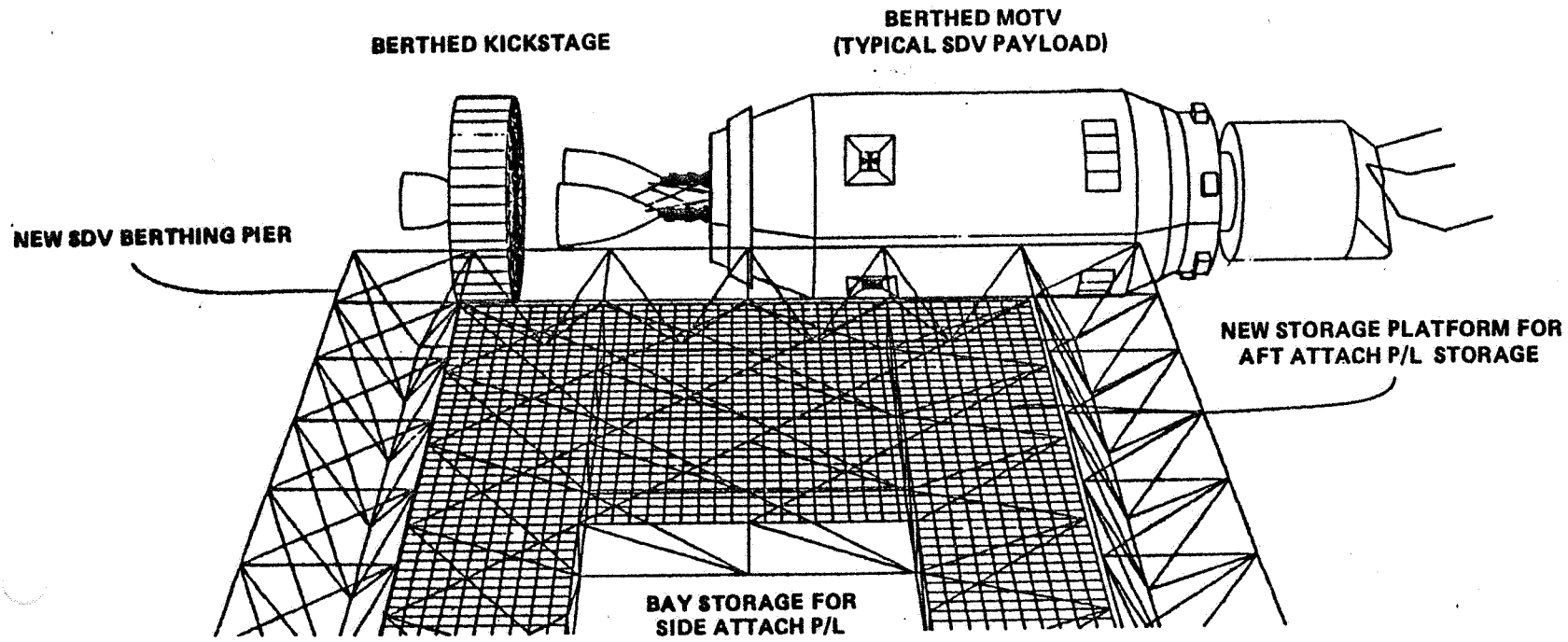

GEO SOC

GEO SOC

The objectives of this task were 1) to determine the requirements and impacts on the SOC elements for potential growth missions operating at GEO, and 2) to identify hardware design modifications resulting from these requirements.

The requirements and principle groundrules, the GEO SOC configuration concepts that were developed from these requirements and groundrules, and some of the key operational concepts are discussed.

GEO SOC

- Objectives
  - Determine requirements and impacts on reference SOC concept to convert to a GEO SOC
  - Identify design modifications
- Approach
  - Define principal assumptions and requirements
    - –Missions
    - –Subsystems
    - –Crew systems
    - –Transportation
    - –Operations
  - Define integrated SOC concepts
  - Define module configuration and subsystem designs
    - –Service module
    - –Habitat module
    - –Logistics module
    - –Storm shelter module
    - –Other facilities (hangar, storage, airlocks, cherrypicker)

820063-014

PRINCIPLE ASSUMPTIONS AND REQUIREMENTS

The facing chart lists some of the principle assumptions and requirements that will influence the design of a SOC operating in GEO. No attempt was made to define a complete list of requirements due to the limited time available for this task. Generally speaking, it can be assumed that the requirements not specifically addressed in this analysis will be "essentially" the same as given in the SOC Requirements Document.

Missions - It will be assumed that the primary mission for the GEO SOC will be satellite servicing. The primary satellite servicing customers will be communications satellites and platforms. The primary servicing mode will be in-situ servicing by a manned servicing vehicle. A secondary mode will be retreiving and bringing "small" satellites to the SOC for servicing and then replacing them in their orbital slot. No attempt was made to identify specific satellites.

ECLS - The ECLS subsystem requirements can be based on the Initial SOC ECLS analysis . One of the primary differences will be that for the GEO SOC that the emergency mode duration has been shortened from 21 days to 4 days. Another primary difference is that the EVA activity will be substantially reduced from 24 eight-hour EVA's per week to 2 eight-hour EVA's per week.

EVA - Due to the hazardous radiation environment, the EVA activity must be minimized. We have selected 2 eight-hour EVA's per week to be the maximum to be allowed. A more detailed operations analysis would have to be conducted to specifically identify the number of EVA's.

Crew Accommodations - The GEO SOC shall accommodate a crew of four (an assumed crew size—a more detailed operations analysis would have to be conducted to specifically identify the crew size).

Crew Scheduling - The nominal crew staytime will be 90 days. This staytime may be variable to respond to crew radiation dose accumulation.

The nominal work schedule for IVA operations will be 8 hours per day, 6 days per week.

SPACE OPERATIONS CENTER

NASA

SOC-1504

Principal Assumptions and Requirements

BOEING

- Missions
  - In situ satellite servicing (comsats) using manned servicing vehicle
- Subsystems
  - Electrical power
    - Battery load–22 kWh
    - Solar array load–27 kW
  - ECLS/EVA
    - 4-day emergency
    - Two 8-hr EVA's/week maximum
- Crew systems
  - Crew of 4
  - 90-day staytime/resupply
  - Radiation protection during solar storms
- Transportation
  - MOTV delivers GEO SOC elements, logistics modules, crew (also used for rescue sortie)
  - Satellite servicing using teleoperator with crew module

820063-015

GEO SOC CONCEPT NO. 1

There are 2 GEO SOC configurations that have been defined by this analysis.

Concept No. 1, shown in the facing chart. is a concept that is most highly similar to the LEO SOC configuration (the Initial SOC configuration, to be specific). This concept is shown as it utilizes a Service Module solar array boom system identical to the LEO SOC's. The cherrypicker is based on the LEO SOC cherrypicker concept except that instead of being mounted on a carriage, it is installed on a berthing port. The closed cabin workstation is used so that EVA is minimized. The storage platform is arbitrarily sized. The storm shelter is a new module not required at LEO. The airlocks, Logistics Module, and Service Module are almost identical to the LEO SOC's. This concept is not recommended as the asymmetrical arrangement does not provide adequate redundancy If the solar array mast were wiped out by a vehicle accident, then there is no backup. In addition, this asymmetric arrangement requires more propellant for stationkeeping/attitude control than Concept No. 2 described below.

SPACE
OPERATIONS
CENTER

GEO SOC Concept 1

NASA — BOEING

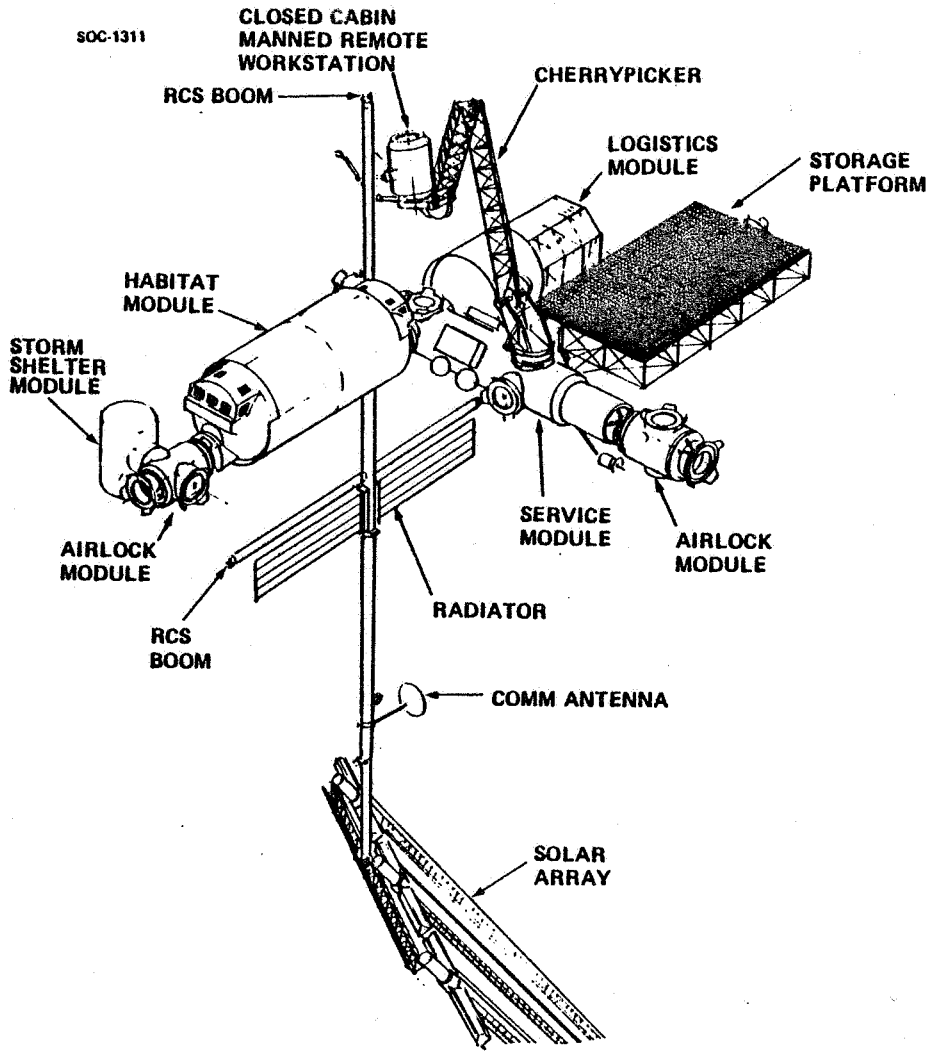

820063-061

GEO SOC CONCEPT NO. 2

Concept No. 2, shown in the facing chart, is the preferred concept. It's primary difference from Concept No. 1 is that it employs a 2-boom Service Module. This leads to a symmetrical arrangement that provides the necessary redundancy and saves propellant. The double-boom Service Module is a significant departure from the LEO SOC design, but the only significant difference is the booms. The rest of the module is identical. This design delta was judged to be a reasonable design change that has more advantages than disadvantages.

SPACE
OPERATIONS
CENTER

GEO SOC Concept 2
Preferred Concept

NASA — BOEING

SOC-1303

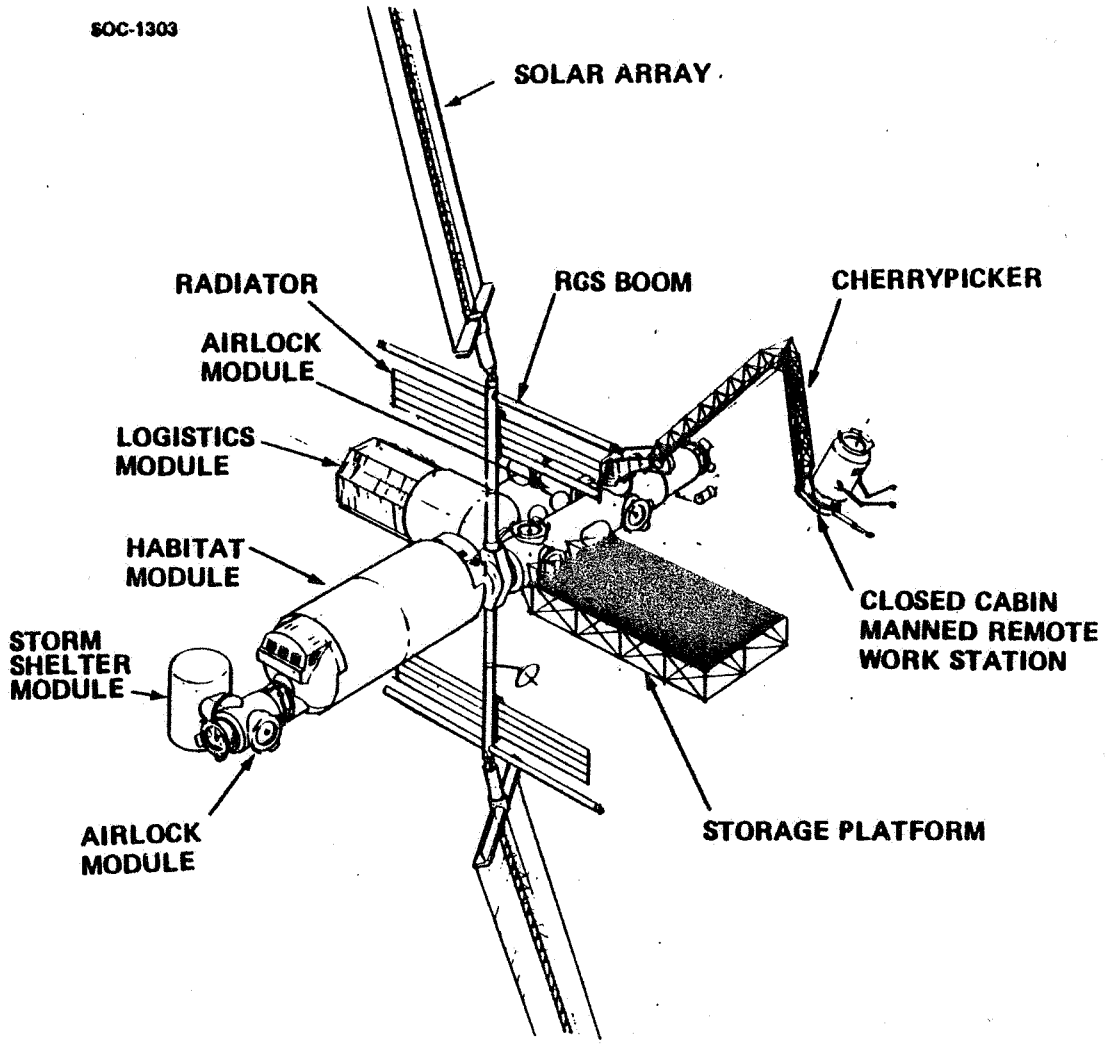

820063-062

GEO SOC CONFIGURATION DELTAS

The next 2 charts summarize the primary configuration deltas that are required to convert the LEO SOC into a GEO SOC.

SPACE OPERATIONS CENTER

GEO SOC Configuration Deltas*

NASA SOC-1491 BOEING

ELEMENT	LEO SOC WBS NO. **	PRIMARY CONFIGURATION DELTAS **
HABITAT MODULE		
• STRUCTURES	1.2.1.1.1	• COMPOSITE POLYETHYLENE/TANTALUM PRESSURE SHELL INSTEAD OF ALUMINUM
• EVA WORK SYSTEM	1.2.1.1.13.8	• 2 GEO EVA SUITS INSTEAD OF 3 LEO EVA SUITS
		• LEAD EVA OVERGARMET ADDED
		• 2 BACKPACK RECHARGE STATIONS INSTEAD OF 3
SERVICE MODULE		
• MECHANISMS	1.2.2.1.2	• 2 SOLAR ARRAY BOOMS INSTEAD OF 1
		• BOOMS ARE SHORTER
		• SIDE PORTS TO BE DOCKING PORTS INSTEAD OF BERTHING PORTS
• ELECTRICAL POWER	1.2.2.1.7	• 3792 FT^2 OF SOLAR ARRAY DISTRIBUTED ONTO 2 BOOMS INSTEAD OF 4327 FT^2 ON ONE BOOM
		• 92 FT^3 OF BATTERIES INSTEAD OF 125 FT^3
• THERMAL CONTROL	1.2.2.1.3	• 500 FT^2 OF RADIATOR AREA INSTEAD OF 840 FT^2
• COMMUNICATIONS		• 5 FT DIAM. KA/S–A BAND ANTENNA INSTEAD OF 18.9 FT DIAM.

* BASED ON GEO SOC CONFIGURATION CONCEPT NO. 2

** REFER TO REFERENCE 9.4-3 FOR LEO SOC ELEMENTS TO WHICH THE GEO SOC ELEMENTS ARE COMPPS POSED

820063-063

SPACE OPERATIONS CENTER

GEO SOC Configuration Delta* (Continued)

BOEING

SOC-1490

ELEMENT	LEO SOC WBS NO. **	PRIMARY CONFIGURATION DELTAS **
SERVICE MODULE (CONT)		
• ECLS	1.2.2.1.13	• SEVERAL ECLS ELEMENT CHANGES DUE TO SHORTER EMERGENCY MODE LIFE SUPPORT TIME (4 DAYS INSTEAD OF 21 DAYS)
STORM SHELTER		• NEW MODULE REQUIRED FOR GEO RADIATION ENVIORNMENT
CHERRYPICKER	1.2.3.2.2	• BERTHED TO BERTHING PORT INSTEAD OF A TRANSPORTER
		• CLOSED CABIN WORK STATION INSTEAD OF OPEN EVA WORK STATION
STORAGE PLATFORM	1.2.3.6.1	• LARGER SIZE
LOGISTICS MODULE	1.2.6.1	• ADD BERTHING PORT TO AFT END
		• SHORTER
SATELLITE SERVICING VEHICLE CREW MODULE	1.2.5.4	• USE COMPOSITE POLYETHYLENE/TANTALUM PRESSURE VESSEL INSTEAD OF ALUMINUM

820063-064

STORM SHELTER CONCEPT

The primary storm shelter design drivers are the following:

- 40 g/cm^2 aluminum-equivalent shielding is required
- Solar storm events can last up to 2 weeks
- The total crew of 4 must be protected
- The minimum volume/person for 14 days is 25 to 125 ft^3/person.
- Minimal life support to be provided
  - Atmosphere & ventilation
  - Drinking water
  - Food (K-rations OK)
  - Sleep restraints
  - Waste management (urine collection and solid waste collection bags OK)
- Minimal command and control to be provided
  - SOC-to-Ground voice communication
  - Subsystem emergency-mode control
- It can be assumed that when the crew has to retreat to this storm shelter that the SOC subsystems are all fully active, i.e., there is full power, data management, ECLS, thermal control, flight control, etc.

We considered several alternative locations for a storm shelter. We recommend that a dedicated storm shelter module be used. The facing chart illustrates the concept. The atmosphere, water, thermal control, data bus, and power will be provided by the SOC subsystems via umbilicals. The module provides a very livable refuge - much better than could ever be provided by trying to include the shelter within other modules.

We considered and rejected an alternative concept that would allow the crew to make short excursions (several minutes) to the toilet or galley dressed in a protective lead overgarmet and goggles. This would alleviate the need for waste management and food storage provisions within the storm shelter. However, this would require that the crew staytime in orbit to be shortened to make up for the additional radiation dosage that they would incur while on these dashes to the toilet and galley. It was judged that this would not be a reasonable operational approach

SPACE OPERATIONS CENTER

Storm Shelter Concept

NASA

BOEING

SOC-1486

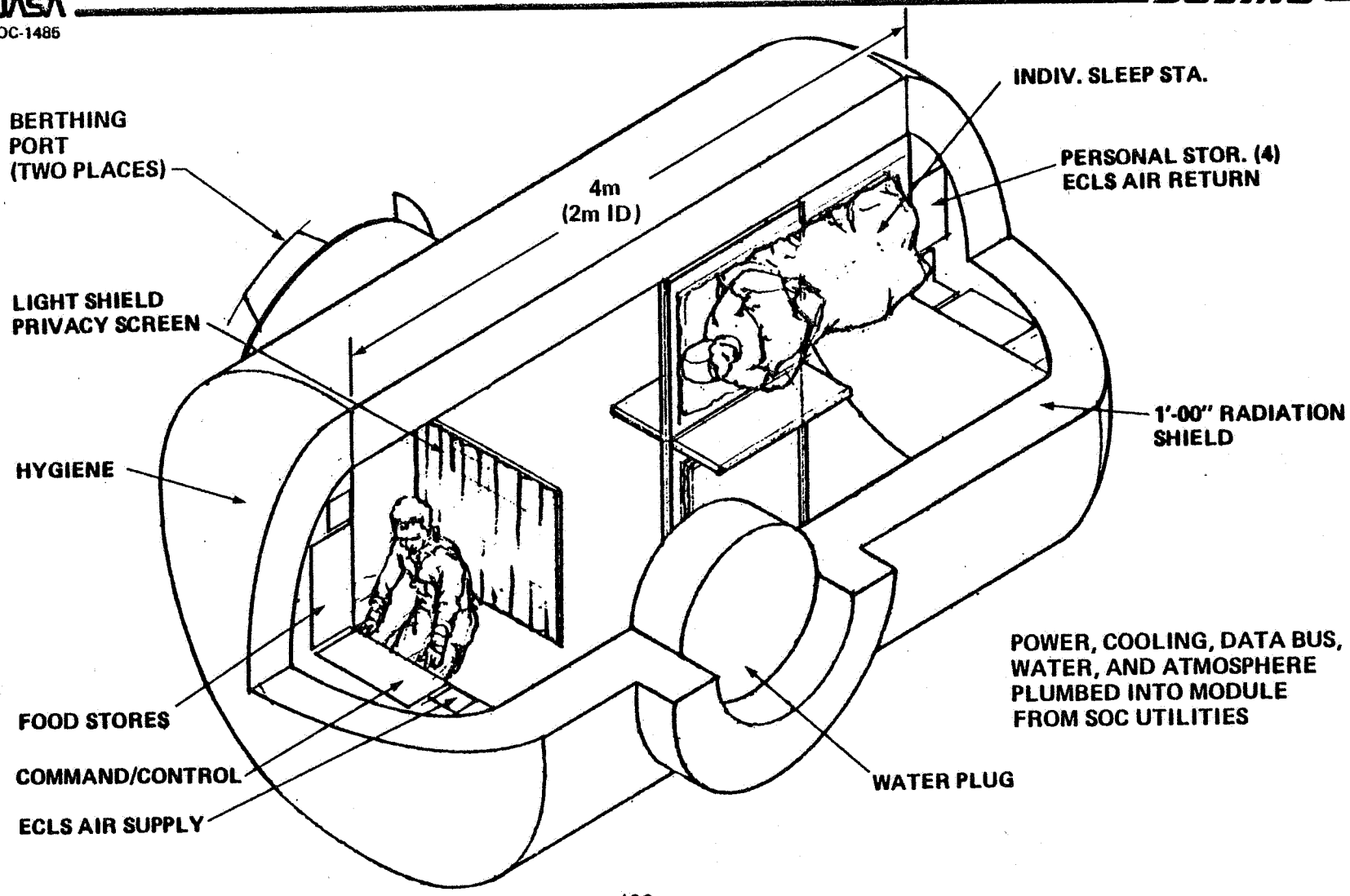

820063-06

Programmatics

SOC PROGRAM OBJECTIVES

The SOC program objectives presented earlier in the Executive Summary are repeated here. These objectives were derived from the mission needs analysis and from consideration of funding and program constraints.

A number of benefits were found for establishing an evolutionary, permanently-manned occupancy of low Earth orbit at the earliest practicable date. These include support of applications science and technology missions of direct economic, scientific and technology benefit; cost effective support of space transportation operations and satellite servicing; and development of technology and basic systems relevant to future DOD applications.

The natural evolution of manned occupancy of low Earth orbit is towards high energy orbits, in particular geosynchronous orbit. Accordingly, the SOC program should provide hardware compatible with a growth to high energy orbits.

The program and hardware systems should be designed to satisfy a broad range of applications. Those presently identified are listed on the facing page. Additional applications may arise in the future.

Finally, the initial space station capability should be based on a single module design in order to reduce funding rate build-up and peak funding. Practical means of accomplishing this were found.

While cost deferrals through selection of an evolutionary program are important, it is nonetheless essential that advanced technology be used in the development of SOC subsystems as appropriate to weight and cost minimization, reduction of resupply and ground control requirements, and facilitization of autonomous and flexible mission operations without extensive reliance on detailed planning through ground support. In particular, advanced technology in propulsion systems, environmental control and life support, and electrical power systems can reduce weight, eliminate hazardous and toxic fluids, simplify thermal control, and reduce packaging volume. Advanced technology in the data management and software systems can provide autonomous mission planning operations, graceful degradation through federated processing, and reduction in software costs through utilization of advanced standardized software systems. Advanced technology in the communications systems can maximize channel capacity and minimize RFI in presently overcrowded RF bands.

SPACE
OPERATIONS
CENTER

NASA

BOEING

SOC-1564

SOC Program Objectives

- Establish program for evolutionary development of permanently manned occupancy of low earth orbit.
- Provide for growth to high-energy orbits.
- Satisfy a broad range of applications
  - Applications science and technology
  - Operational support of space transportation system
  - Construction/assembly of large space systems
  - Satellite servicing
  - DoD missions
- Establish initial space station capability based on a single shuttle launched module design

PROGRAMMATIC FINDINGS FROM PART 1 OF THE STUDY

Several evolutionary paths were identified in part 1 of the study. However, all of these required that any permanently-occupied station incorporate at least one service module and one habitat module. Consequently, a simultaneous development of these two elements was required and the resulting peak funding exceeded anticipated funding abilities. Some reduction in peak funding was possible through program stretchouts, but the stretchouts tended to be ineffective inasmuch as it was felt appropriate to assess cost penalties against stretched out programs.

These results were the source of the motivation to find a system design that could facilitate initial operations based on a single module design.

SPACE OPERATIONS CENTER

NASA

SOC-1528

Programmatic Findings from Part 1 of Study

BOEING

- Several evolutionary paths identified
- System design required that any permanently-occupied station incorporate a service module and a habitat module
- Resulting peak funding exceeded anticipated funding ability
- Program stretchouts were found less effective than desired in reducing peak funding
- This indicated desirability of an initial SOC based on a single module design

MISSION NEEDS SUMMARY (PART 2 RESULTS)

The mission needs analysis found that a four-man facility would be sufficient for the first three or four years of operations if space basing of the OTV were deferred beyond this initial time frame. The initial mission needs are primarily the application science and technology missions with some need for satellite servicing and an occasional need for operations support when large payloads need to be delivered separately from their upper stage.

Additional operations support opportunities exist for assisting the shuttle in handling and launching small payloads with pan-type stages or IUS systems. On-orbit assembly of IUSs could increase payload capability for high-energy or high-payload missions. The facility requirements to handle these smaller systems are minimal as compared to those for large payloads and orbital transfer vehicles.

The operations support activity dominates the mission requirements later and a facility with substantial operations support equipment is then required.

We found that the crew requirements grow from a level of two to four people in the early 1990s, to approximately 12 people in the mid-90s and approaches 20 people towards the year 2000. These figures are based on the median traffic model. The low traffic model grew somewhat more slowly and approached 12 to 14 people by the year 2000. The high traffic model had very extensive applications science and technology activities compounded with extensive mission operations support and construction requirements. This led to a total need for a space crew in excess of 50 people by the year 2000.

SPACE
OPERATIONS
CENTER

NASA
SOC-1527

Mission Needs Summary
(Part 2 Results)

BOEING

- Can start small if OTV space basing deferred
- Initial mission needs mainly applications science & technology
- Operations support dominates later
- Crew requirement grows from 2 - 4 in 1990-92 to 12-20 in 1996 - 2000

EVOLUTIONARY GROWTH IN SOC CREW REQUIREMENTS

The facing page illustrates the projected growth in SOC crew requirements for the median traffic model.

SPACE OPERATIONS CENTER

NASA

OTV Basing: Space vs Ground

(Median Traffic Model)

BOEING

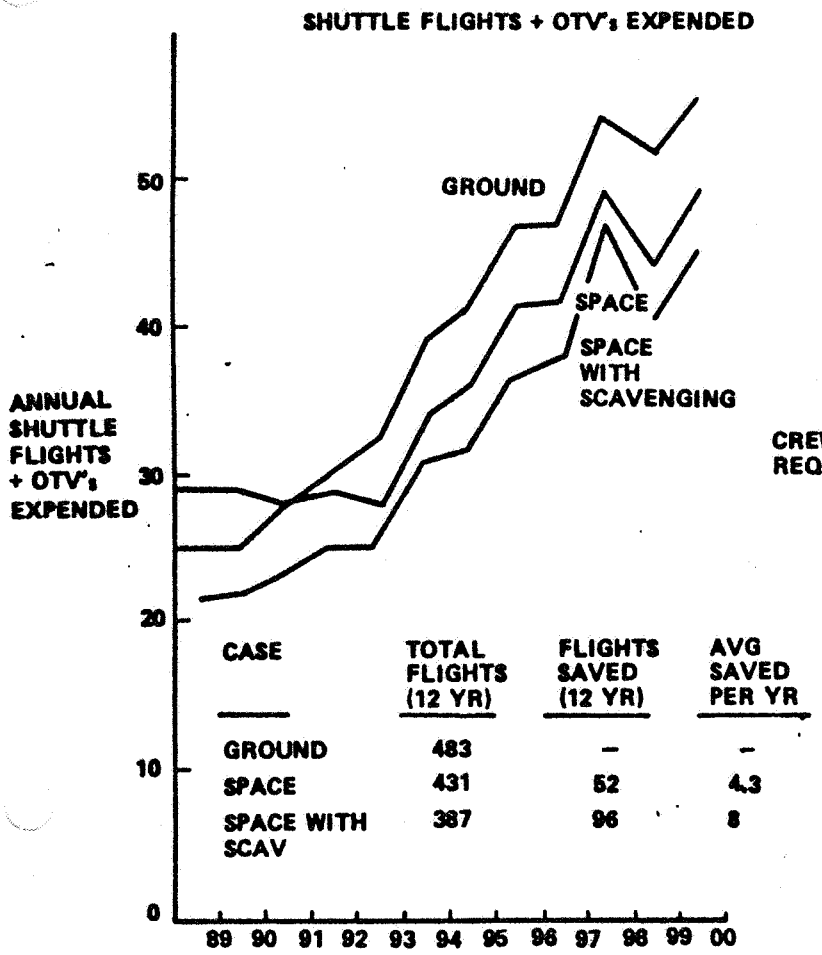

CASE	TOTAL FLIGHTS (12 YR)	FLIGHTS SAVED (12 YR)	AVG SAVED PER YR
GROUND	483	–	–
SPACE	431	52	4.3
SPACE WITH SCAV	387	96	8

SPACE-BASING SAVES 52 @ $40M = $2.081B

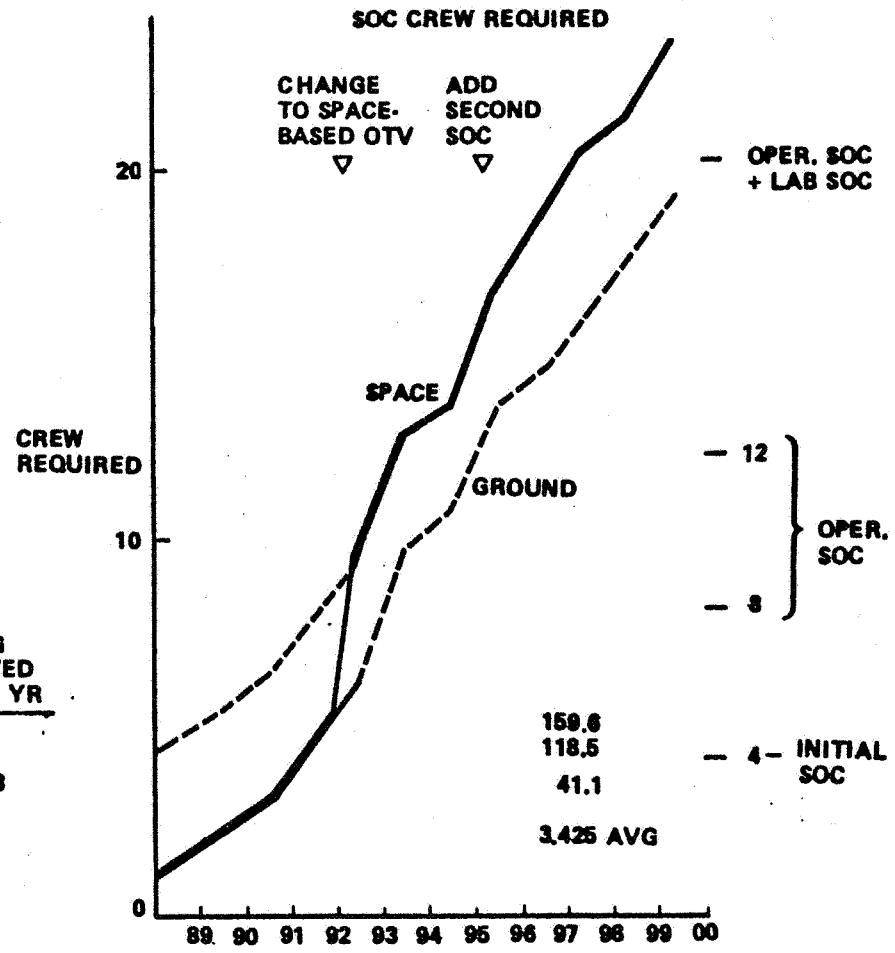

SPACE-BASING COSTS:
3.425 AVG EXTRA CREW X 12 YR X 312 WORK-DAYS/YR
X $130K/MANDAY = $1.67B

OPERATIONAL SOC CONFIGURATION

The facing page illustrates the updated operational SOC configuration based on the original service module and habitat module concepts. This configuration was fully described in an earlier section of the document.

SPACE OPERATIONS CENTER

NASA

SOC-1636

Operational SOC Configuration

BOEING

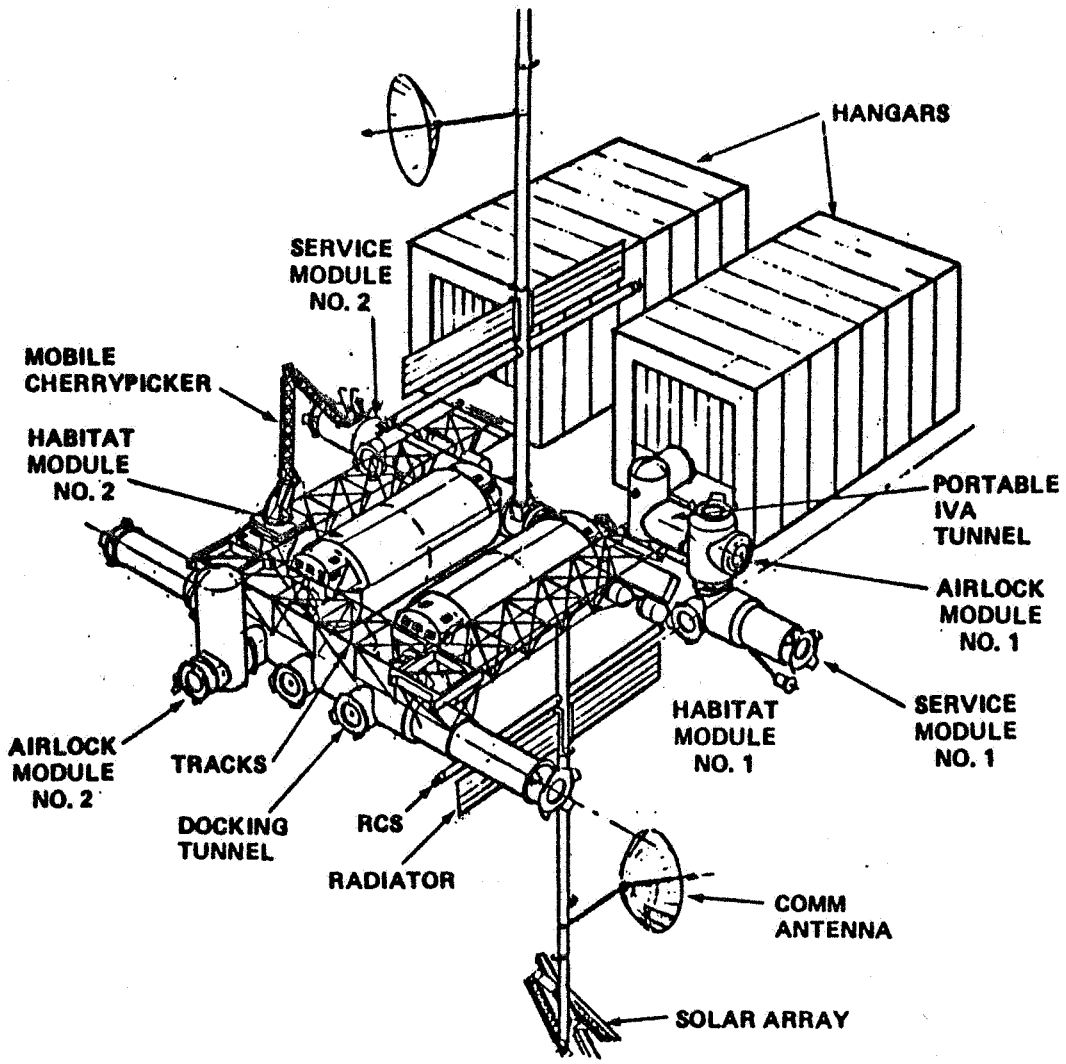

SOC DEVELOPMENT PATH OPTIONS

Based on the configuration from the preceding page, an evolutionary approach was identified as illustrated here. This evolutionary approach required the habitat and service modules to be developed for the initial SOC. The operational system was then created by adding modules and equipment to provide for the operational system capabilities. Further growth paths included the OTV space basing and construction equipment. Finally, it was noted that the SOC could be replicated for special purposes or for alternate orbits.

The mission needs analysis conducted in the second phase of the SOC study indicated that space basing of the OTVs would be desirable at the time the operational SOC is established, but that the establishment of this operational capability could be deferred three to four years with minimal penalties.

SPACE OPERATIONS CENTER

NASA — BOEING

SOC-1089

SOC DEVELOPMENT PATH OPTIONS

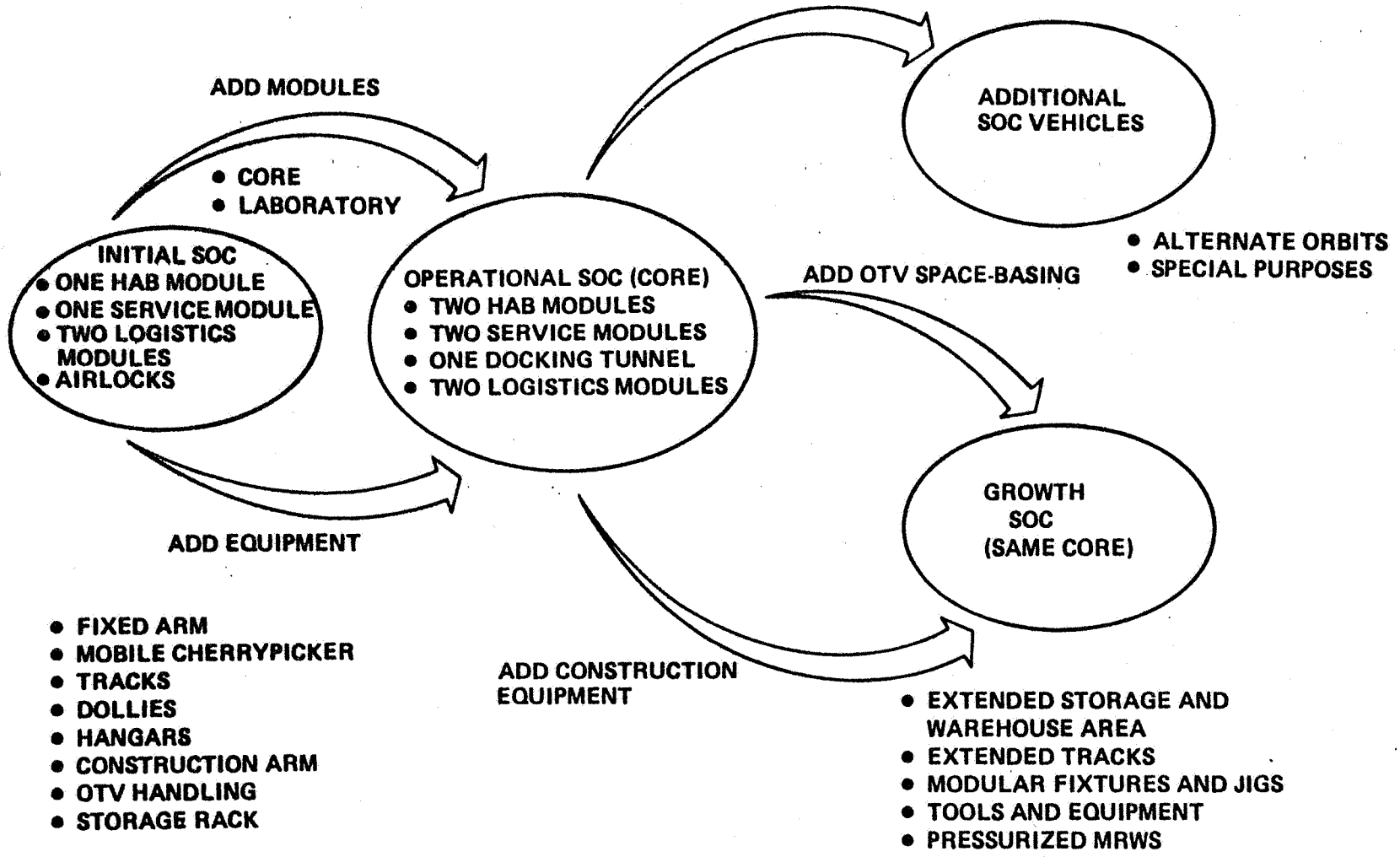

SOC REFERENCE CASE FUNDING REQUIREMENTS

The funding requirements for a direct build-up of the operational SOC are illustrated here. The resulting configuration would accommodate eight people and would include two hangars for OTVs, but did not include OTV space-basing equipment.

The peak funding approached 900 million in 1980 dollars. In then-year dollars, this peak funding would be roughly double this figure, based on an inflation rate of 10% in 1981 and 1982 and 7% thereafter.

SPACE OPERATIONS CENTER

NASA

SOC-1100

SOC Reference Case Funding Requirements

BOEING

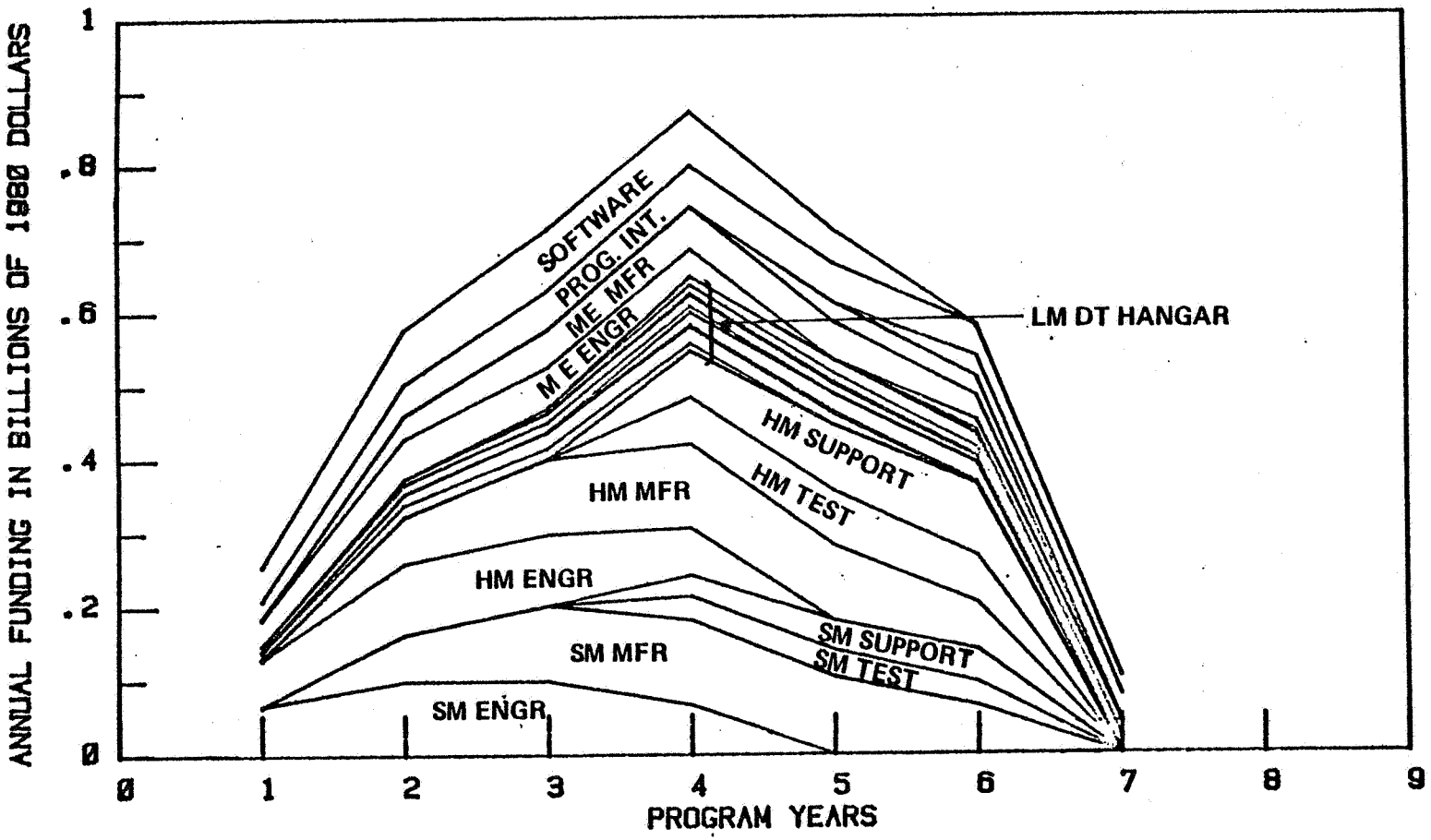

SOC STRETCHED-OUT PROGRAM FUNDING REQUIREMENTS

If the evolutionary path were followed, a single habitat and service module would be placed in orbit to support four people with the added equipment and facilities placed in orbit roughly two years later. It was important not to defer the addition of the balance of the equipment beyond this time period because engineering and production gaps for the habitat and service module hardware would result in significant cost penalties. As a result, the stretched-out program was not effective in reducing peak funding. The peak funding reduction was less than 10%.

SPACE OPERATIONS CENTER

Modified SOC Program Funding
(Deferred Buildup from Initial to Operational SOC)

NASA SOC-1090 BOEING

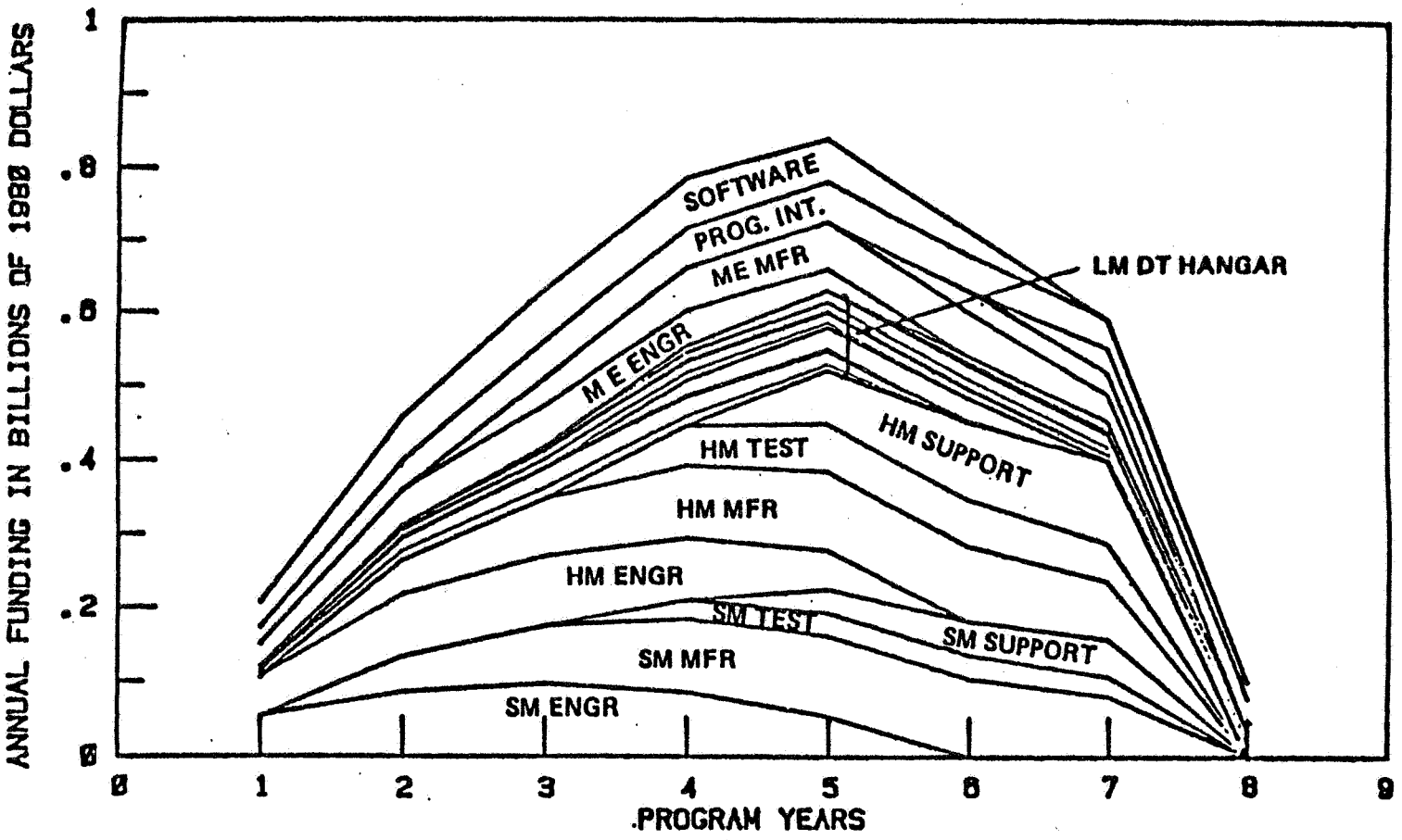

REPRESENTATIVE PATHS FOR RECOMMENDED EVOLUTIONARY PROGRAM

By modifying the service module design to provide initial habitability, the development of the habitat module can be deferred approximately four years, commensurate with the mission needs analysis estimate as to whe the 8- to 12-man capability and OTV space basing are desired. The initial service module configuration can also be modified to serve as a logistics module. Consequently, one primary module is adequate to begin the program. Potential offshoots of the initial SOC include use of its subsystems and automated platforms and a minimum station housing a crew of two or three.

It is important to recognize that this minimum station has relatively little redundancy and does not offer the fail-operational/fail-safe capabilities. In the event of a major failure, this minimum station would go into a fail-safe mode and a rescue would be required within 21 days.

Alternative paths that could be followed to reach the operational system capability are indicated. These were described in additional detail earlier.

SPACE OPERATIONS CENTER

NASA

SOC-1534

Representative Paths For Evolutionary Program

BOEING

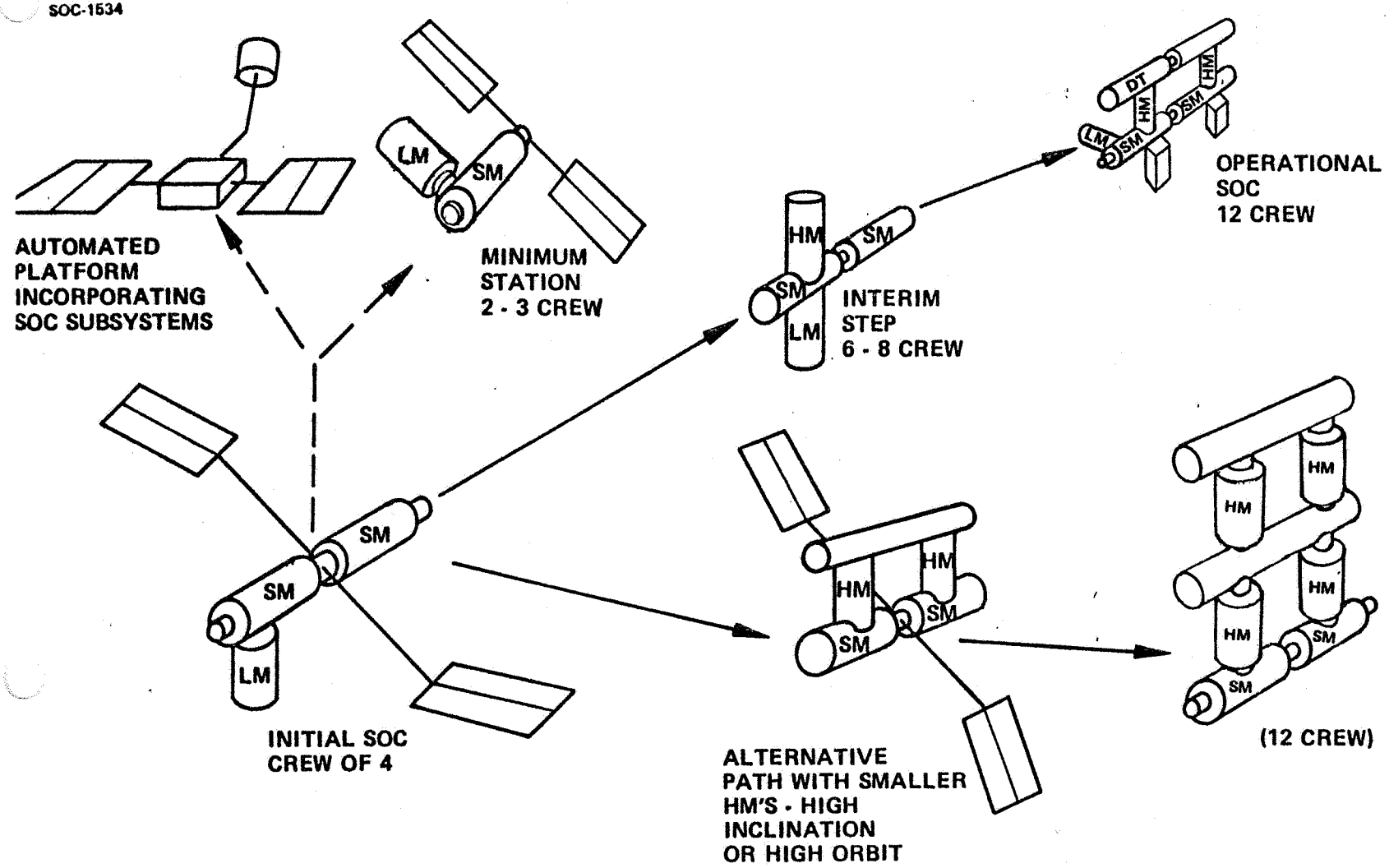

INITIAL CONCEPT OF A HABITABLE SERVICE MODULE

This "German Hand Grenade" concept was the initial attempt at designing a service module with habitable facilities onboard. It is a feasible design, but increases the complexity of the articulated booms and equipment.

SPACE OPERATIONS CENTER

Modified Service Module

NASA BOEING

SOC-1559

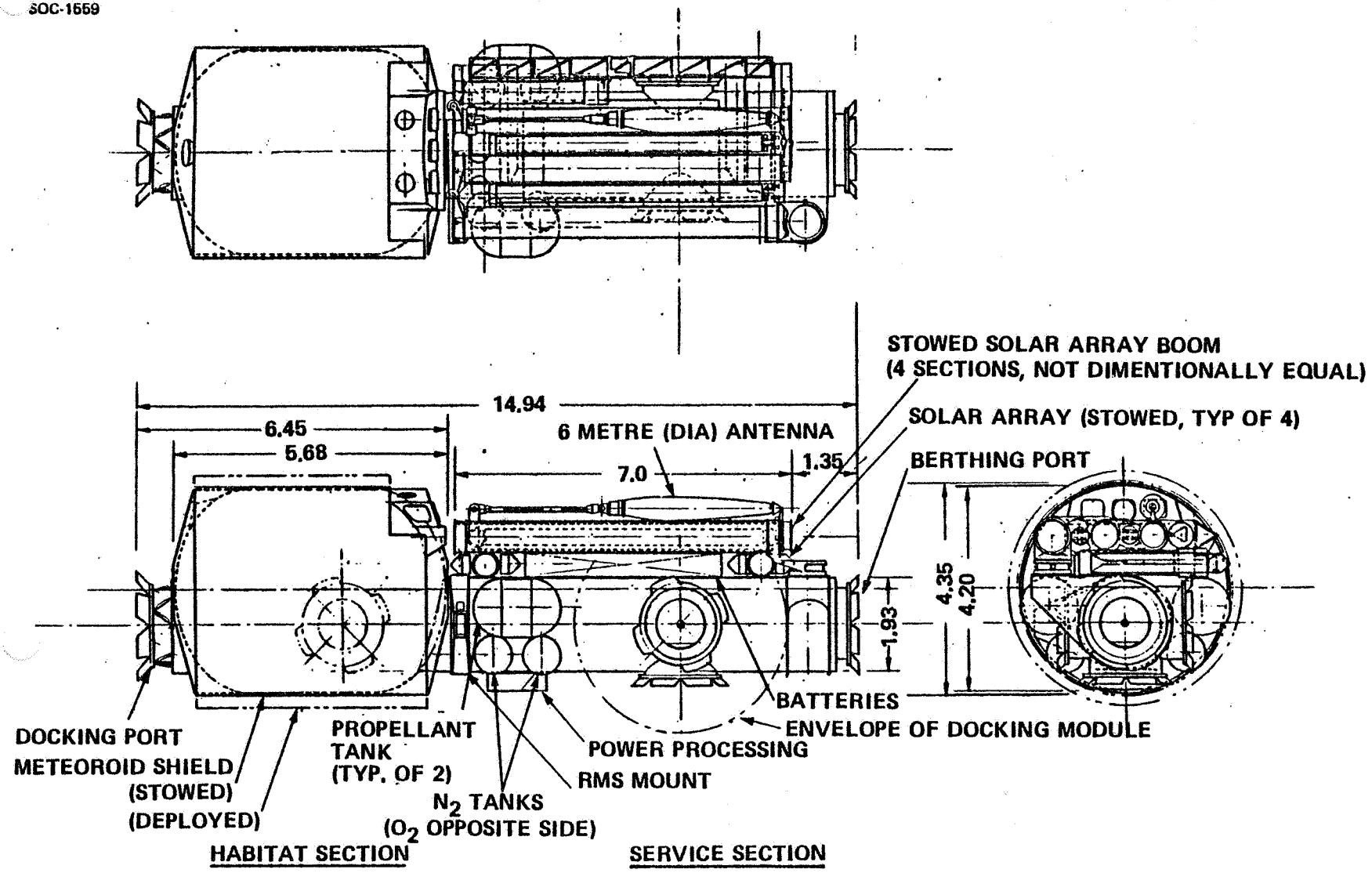

INCREASED DIAMETER SERVICE MODULE

Additional exploration of the service module design concept indicated that a service module with an increased diameter but with the large diameter section offset from the shuttle payload bay center line would allow packaging of booms and equipment alongside the large diameter section with additional packaging space at the ends of the small diameter sections. This arrangement appears to offer the most efficient packaging for a habitable service module.

SPACE OPERATIONS CENTER

Reduced Diameter Service Module

NASA

SOC-1423

BOEING

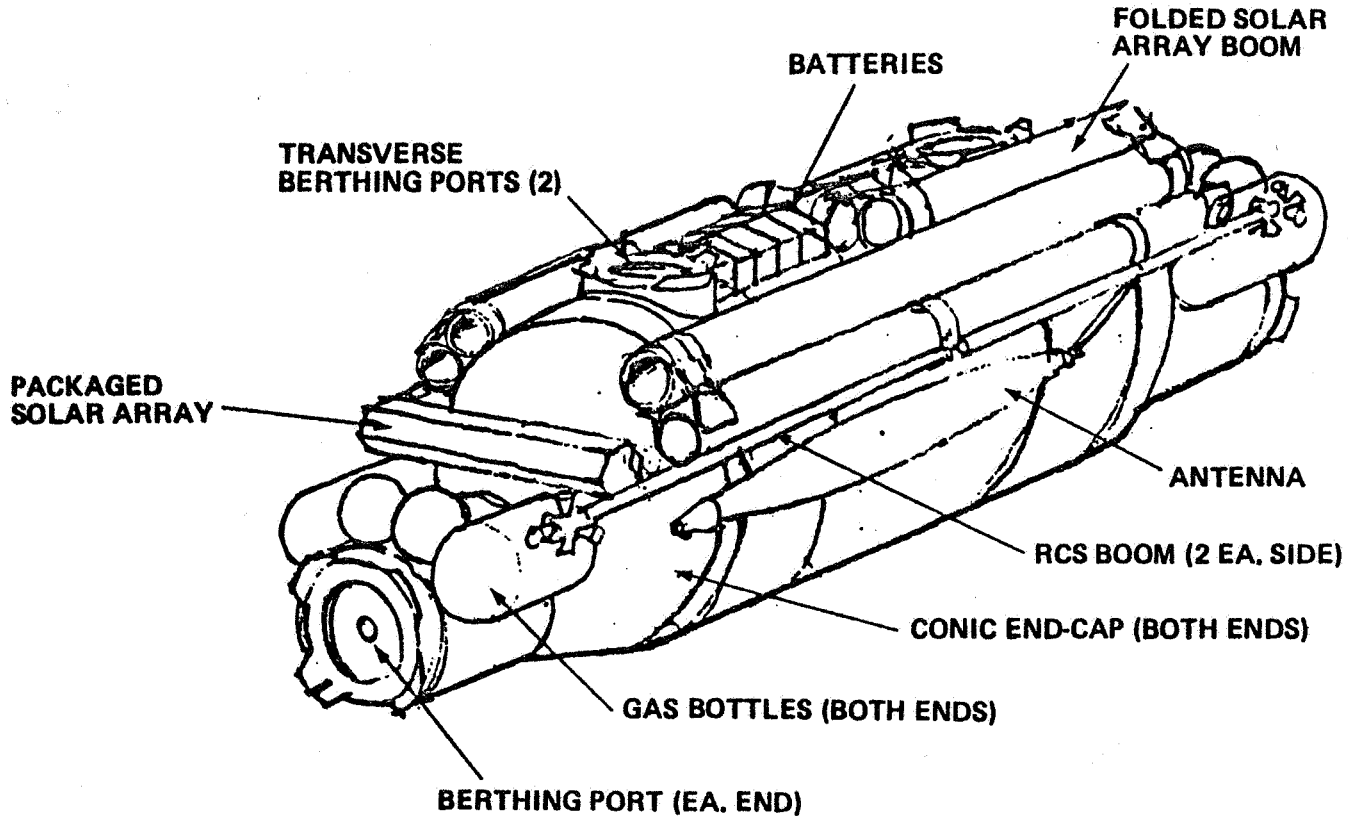

EXTERNAL STORES FOR ONE SERVICE MODULE

The reference system employs hydrazine for orbit make-up propulsion and nickel hydrogen batteries for electrical power storage. Additional storage required on the service module includes emergency repressurization gas.

An alternate integrated electrical power and propulsion system was investigated using oxygen hydrogen fuel cells to deliver stored energy during the dark period of the orbit. Fuel cell reactants are regenerated by electrolyzers on the light side of the orbit. The oxygen hydrogen gas available from the reactant storage tanks is also used to operate oxygen hydrogen gas thrusters for orbit make-up. Propellant reserves are stored as water rather than hydrazine. This modified system is expected to deliver an ISP of about 375 seconds as compared to 230 seconds for hydrazine. It also offers a reduced packaging volume as indicated on the facing page.

SPACE OPERATIONS CENTER

NASA

SOC-1532

External Stores for One Service Module

BOEING

	REFERENCE		FUEL CELL-ELECTROLYSIS	
	VOL, M^3 (IN^3)	MASS, KG (LB)	VOL, M^3 (IN^3)	MASS, KG (LB)
HYDRAZINE	0.84 (51260)		0	
BATTERIES	3.53 (215,400)	1941 (4279)	0	
O_2 REPRESS GAS	0.6 (36,600)		0.6 (36,600)	
O_2 FUEL	0		0.487 (29,700)	
N_2 REPRESS GAS	1.21 (73,800)		1.21 (73,800)	
H_2 FUEL	0		0.951 (58,000)	
PPU's	0.5 (30,500)		0.5 (30,500)	
FUEL CELLS	0		0.61 (37,200)	364 (802)
ELECTROLYSIS UNITS	0		0.61 (37,200)	364 (802)
TOTALS	6.68 (407,600)		4,968 (303,200)	

MODIFIED LOGISTICS MODULE DESIGN

The offset cylinder with reduced diameter discussed for the service module application is also applicable to the logistics module design. Adequate storage volume is available for external stores and an increased volume is available for internal stores.

It was found that increased internal volume was necessary to accommodate experiments and equipment associated with the applications science and technology missions.

Commonality of the structure between the service and logistics modules will reduce the initial system cost.

SPACE OPERATIONS CENTER

NASA

SOC-1476

New Logistics Module Concept

BOEING

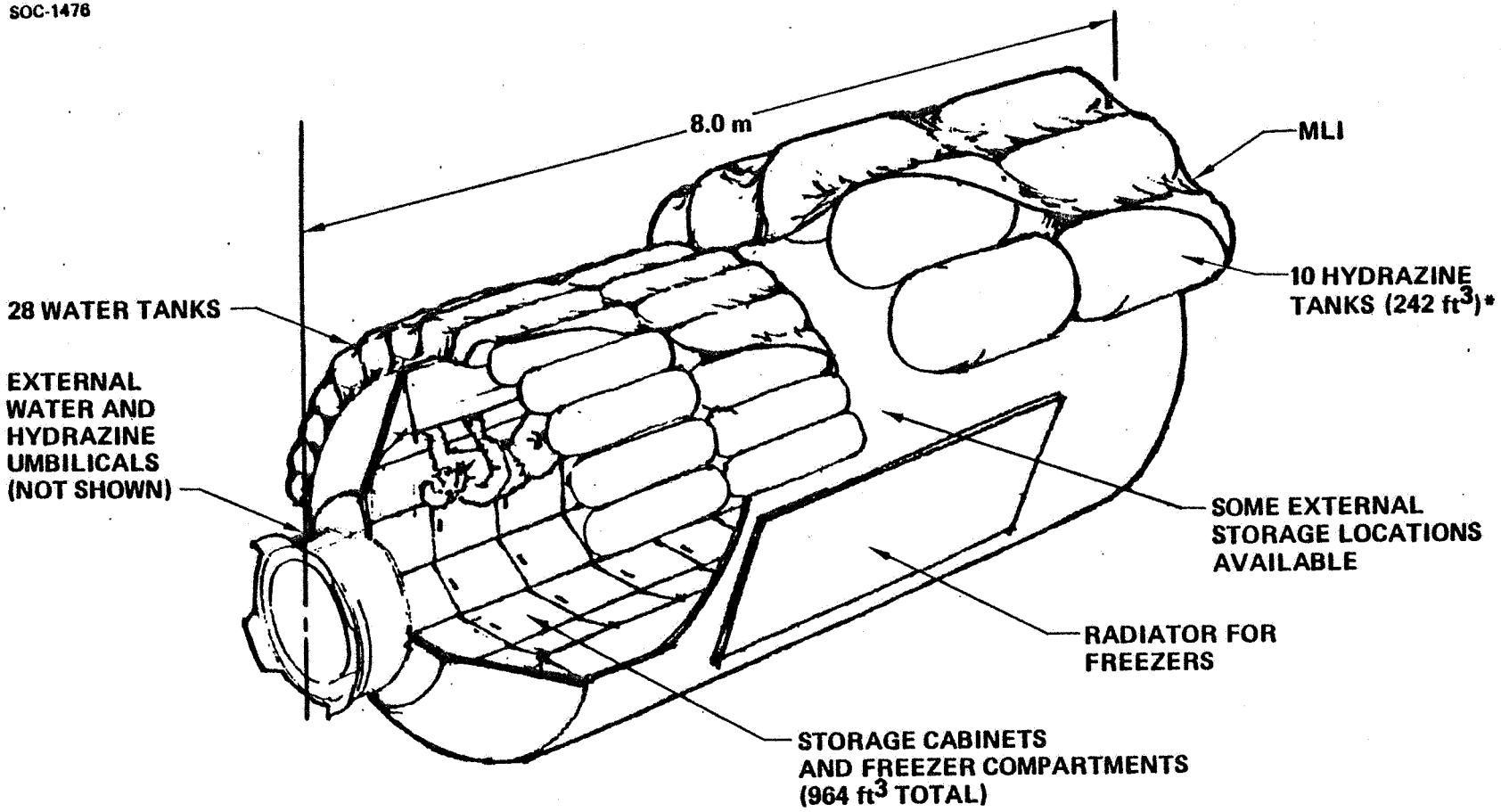

*Includes blow-down provisions

820063-53

MODULAR CONCEPT APPLIED TO REFERENCE HABITAT MODULE ARRANGEMENT

A modular approach was also selected for habitat module design. This modular approach utilizes planning modules such that habitats can be tailored to the length and configuration required for particular missions. It is not intended to actually produce the habitat structure in cylindrical slices. The tooling and structural design would be selected such that a cylinder length of the appropriate length could be produced and the internal arrangement would be modified as necessary to provide the desired facilities. Subsystems are designed in capacity increments for support of two people such that a full-length habitat will include redundant subsystem equipment. A half-length habitat for two people would include a single subsystem set, as does the initial service module.

SPACE OPERATIONS CENTER

Modular Concept Applied to Reference Habitat Module Arrangement

NASA

BOEING

SOC-1274

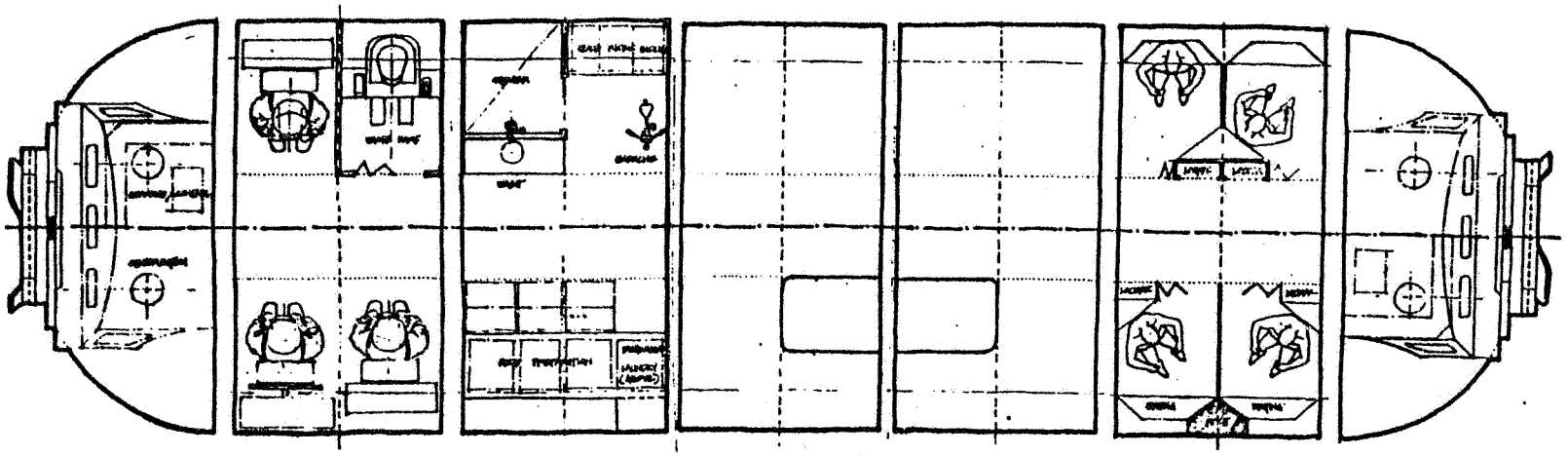

MODULAR CONCEPT APPLIED TO A SHORT HABITAT

Illustrated here is the application of the modular planning concept to a reduced-length habitat. This facility also provides crew quarters for four people but provides a minimal area for hygiene, recreation and health maintenance. It is simply an example of the use of the modular planning design concept to create alternative configurations.

SPACE
OPERATIONS
CENTER

Modular Concept

NASA
SOC-1255

BOEING

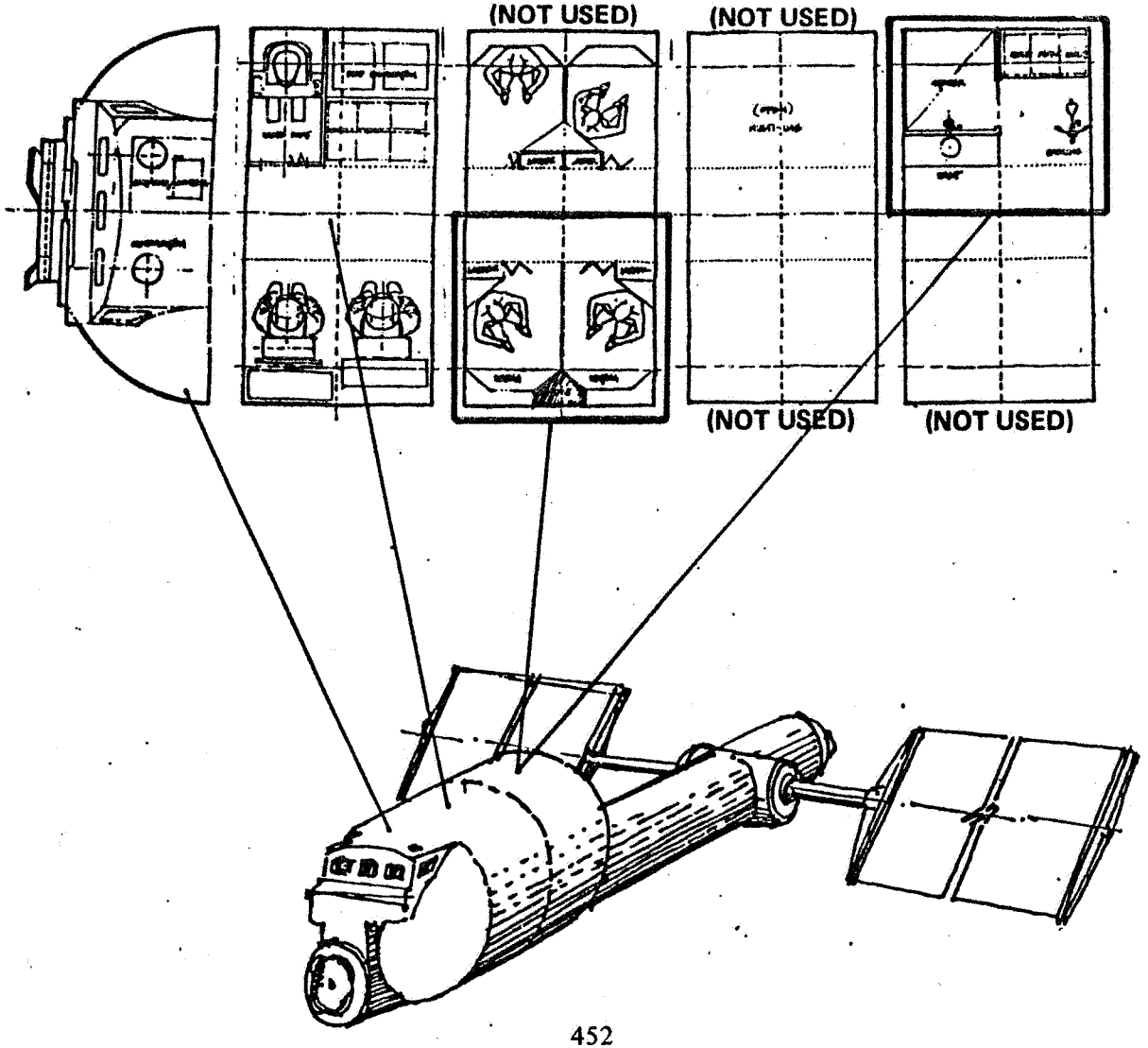

SOC PROGRAM SUMMARY SCHEDULE

A detailed event logic network for a representative SOC module design and development was developed and analyzed employing automated data processing. The detailed network included approximately 130 events. Shown on the facing page is a summary schedule derived from this detailed network.

SPACE OPERATIONS CENTER

NASA

SOC-1046

BOEING

SOC PROGRAM SUMMARY SCHEDULE

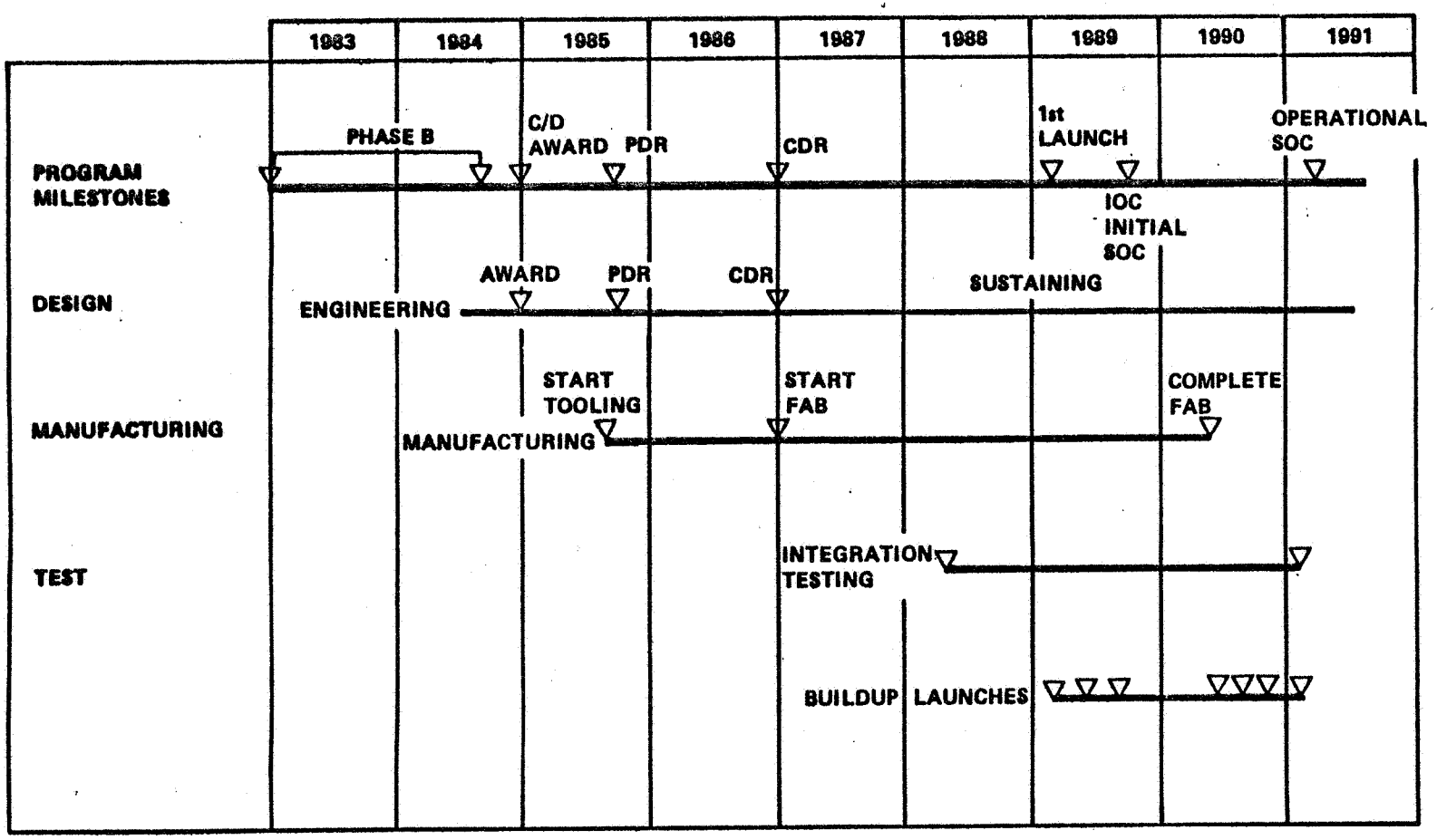

NOTE: RESUPPLY LAUNCHES ON 3 – MONTH CENTERS AFTER IOC

SOC PROGRAM DETAILED SCHEDULE

The next three pages illustrate a segment of the detailed schedule for a major SOC module. This schedule was developed employing automated network analysis.

SPACE OPERATIONS CENTER

SOC Production Schedule

(Sample Page 1)

NASA — BOEING

SOC-1460

PROJECT PRODSOC PLOT PRODSOC RUN DATE 21 DEC 91	START 2 JAN 85 COMPLETION 15 MAR 91	BSOC LOGIC FLOW BSOC STUDY

PLANNING SCHEDULE

SORT NODES

< 100	>CONTRACT AWARD	
< 102	>INITIAL SYSTEM SPEC	
< 104	>CONFIG & MGMT PLAN SUBMIT	D= 32
< 106	>START ANALYSIS &TRADES	D= 22
< 108	>QUARTERLY REVIEW	D= 66
< 110	>INTERFACE RQMTS RELEASE	D= 68
< 112	>UPDATED SCHEDULE BASELINE	D= 87
< 114	>QUARTERLY REVIEW	
< 116	>COMPL ANALYSIS & TRADES	D=
< 118	>PDR	
< 120	>QUARTERLY REVIEW	
< 122	>QUARTERLY REVIEW	
< 124	>QUARTERLY REVIEW	
< 126	>QUARTERLY REVIEW	
< 128	>CDR	
< 140	>SOC FINAL REPORT	
< 200	>LAYOUTS START	D= 55
< 202	>INITIAL PROCUREMENT SPECS	D= 50
< 204	> EAMRS REL	D= 75
< 206	>LAYOUTS COMPL	
< 210	>DEV TESTS START	

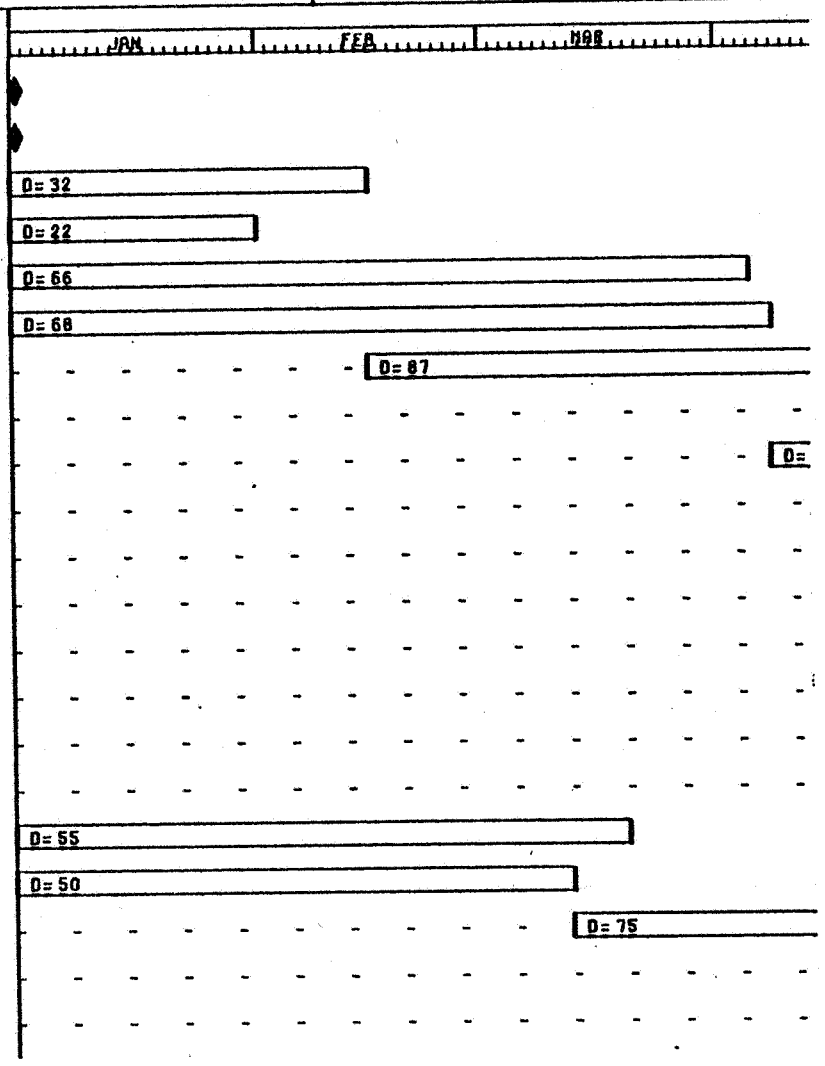

SPACE OPERATIONS CENTER

SOC Production Schedule

(Sample Page 2)

NASA — BOEING

SOC-1461

ILE

MODE O/F
INTERVAL: 1 DAY(S)

1985

APR | MAY | JUN | JUL | AUG | SEP | OCT

D= 60

D= 107

D= 64

D= 128

SPACE OPERATIONS CENTER

SOC Production Schedule

(Sample Page 3)

NASA

SOC-1462

BOEING

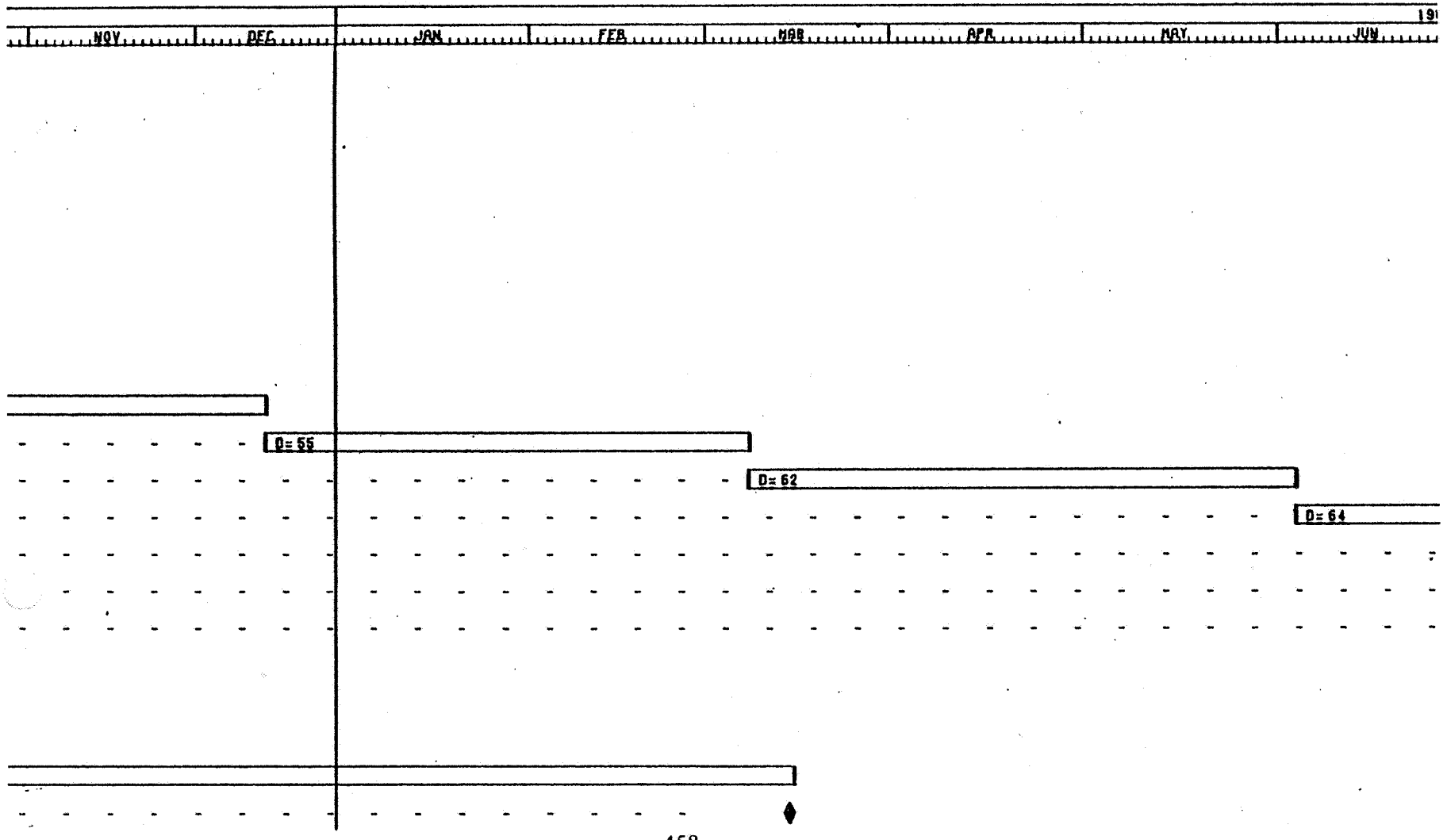

SOC EVOLUTIONARY DEVELOPMENT SCHEDULE

A representative evolutionary development schedule is shown on the facing page. This program includes three increments. The first increment develops an initial four-man capability SOC employing two service modules and a logistics module and a set of initial mission equipment. The second increment develops the habitat modules needed to increase the crew capacity to 12 and mission equipment including the space-basing equipment for the OTV. The third increment then includes construction equipment expected to be needed by about 1995.

SPACE OPERATIONS CENTER

NASA

SOC-1561

SOC Evolutionary Development Schedule

BOEING

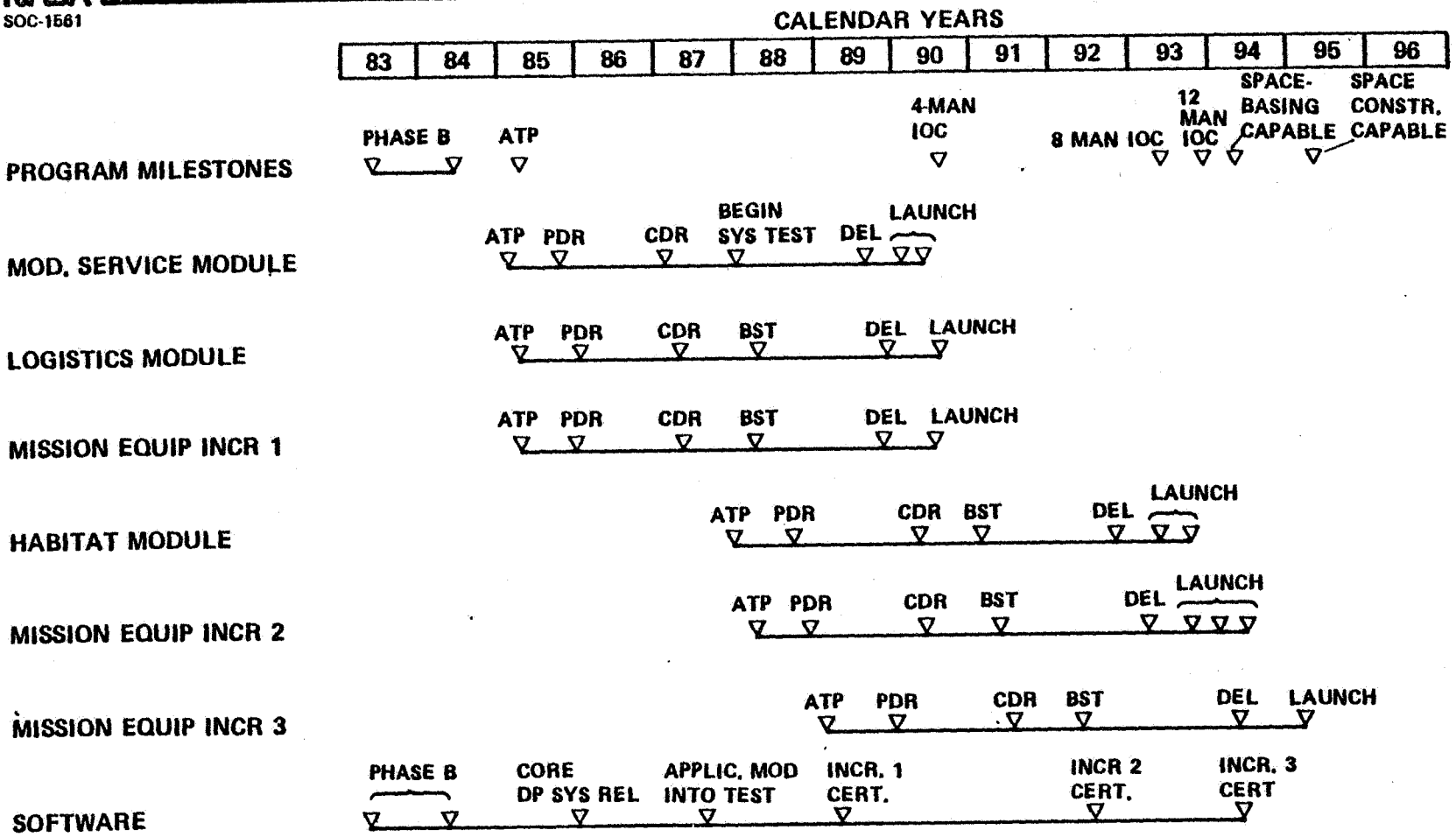

MISSION EQUIPMENT

INCR. 1: HANGARS, AIRLOCKS, AND RMS-TYPE ARM WITH EVA WORK STATION
INCR. 2: MOBILE CHERRYPICKER & TRACKS, SPACE-BASING EQUIPMENT; DOCKING TUNNEL
INCR. 3: CONSTRUCTION EQUIPMENT

ELEMENTS OF COST 1980 DOLLARS IN MILLIONS

The elements of cost and their application to the different phases of the program are summarized on the facing page.

SPACE OPERATIONS CENTER

NASA

SOC-1573

Elements of Cost - Modular Evolutionary Program

BOEING

	INITIAL (4 CREW)		OPERATIONAL (12 CREW)		GROWTH (CONSTR. EQUIP. ADDED)	
	DDT&E	PRODUCTION	DDT&E	PRODUCTION	DDT&E	PRODUCTION
MODIFIED SERVICE MODULES	684	564				
LOGISTICS MODULES	106	158				
HABITAT MODULES			550	450		
DOCKING TUNNEL			70	80		
AIRLOCKS	30	50				
HANGARS	70	25		25		
SUPPORT EQUIPMENT	22	76	275	195	25	15
OTV SPACE-BASING EQUIP			200	150		
CONSTRUCTION EQUIP			25	15	250	150
SOFTWARE	150		150		90	
BUILDUP SUPPORT	50	75	100	120		
NO. OF SHUTTLE FLIGHTS		(3)		(6)		(2)
SUBTOTALS	1112	948	1370	1035	365	165
TOTALS	2060		2405 ADDED; TOTAL $$ 4465		530 ADDED; TOTAL 4995	

NOTES:
1) COSTS ARE 1980 DOLLARS IN MILLIONS
2) SHUTTLE LAUNCH COSTS NOT INCLUDED
3) LEVEL I PROGRAM INTEGRATION COSTS NOT INCLUDED

SOC REFERENCE CASE FUNDING REQUIREMENTS

This chart presented earlier is repeated here for comparison purposes.

SPACE OPERATIONS CENTER

NASA

OC-1100

SOC Reference Case Funding Requirements

BOEING

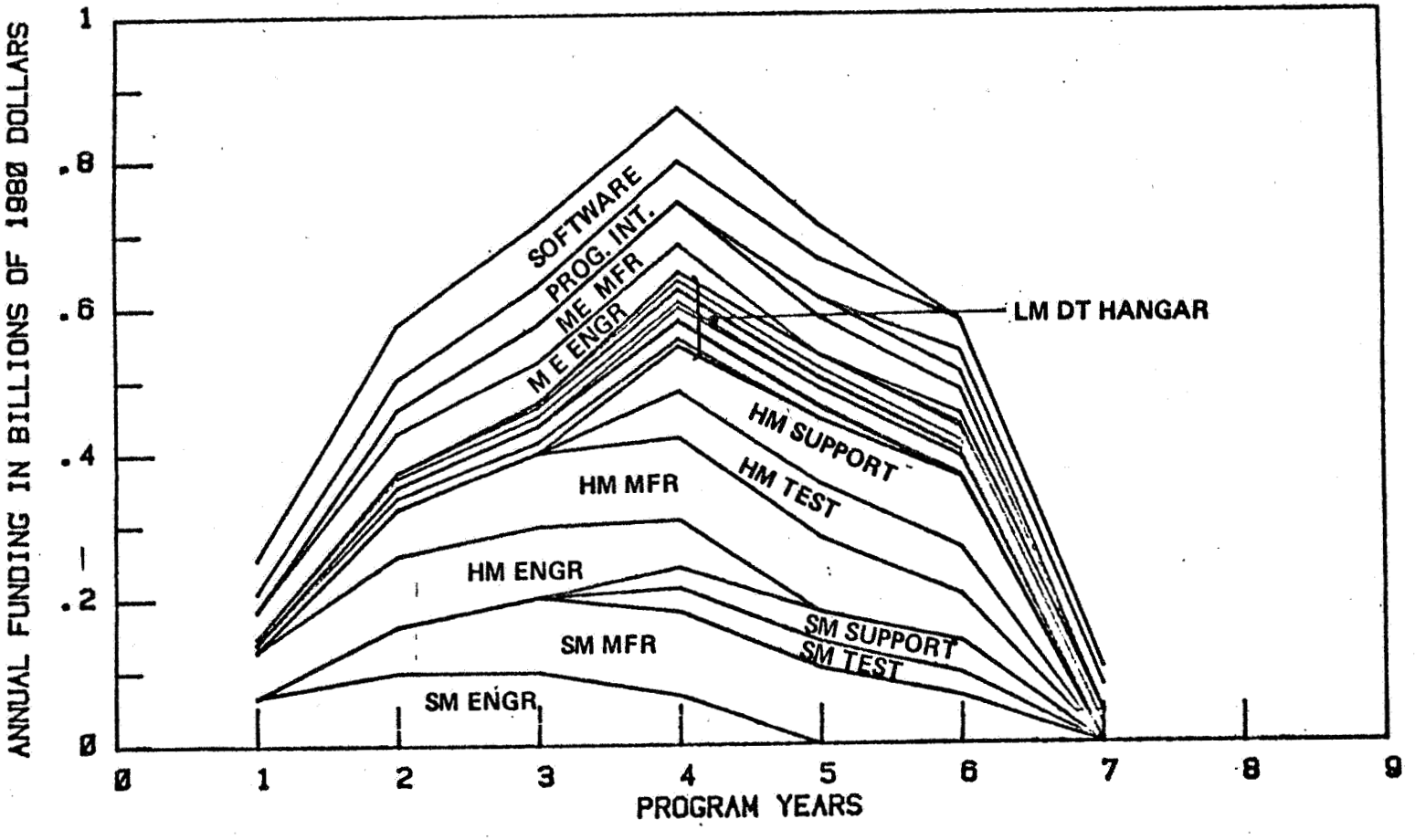

SOC EVOLUTIONARY PROGRAM (DEVELOPMENT FUNDING KEYED TO MISSION NEEDS)

With the deferral of the habitat module and major elements of mission equipment for approximately four years, a roughly 25% reduction in peak funding is accomplished. Also the rate of build-up of funding is decreased from the original reference program.

SPACE OPERATIONS CENTER

SOC Evolutionary Program

Development Funding Keyed to Mission Needs

NASA — BOEING

SOC-1549

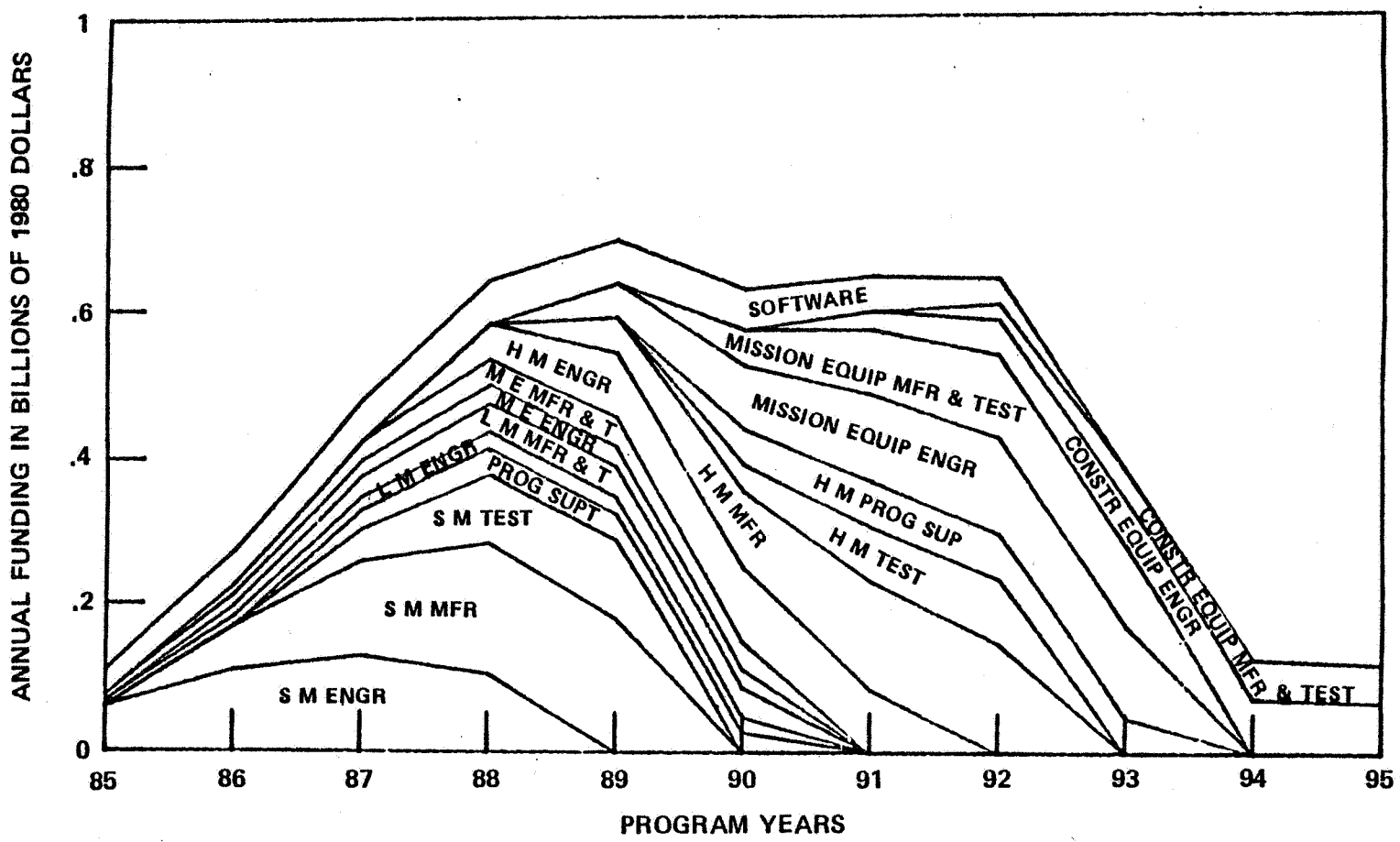

COST BENEFITS OF SOC

A preliminary cost benefit analysis was conducted considering three categories of costs and three resulting benefits. The first category of cost was research and development for the SOC systems. This cost category did not include investment costs for flight hardware. These costs were compared to anticipated benefits resulting from an increased U.S. share of overall space operations traffic, in turn resulting from a more attractive capability for U.S. systems to provide better services at lower cost.

The investment cost included the acquisition of flight hardware and its establishment in space. This investment cost then is to be amortized against the new capabilities and cost savings attained through its availability.

The third category of costs was ongoing operations costs, and this category of cost was compared with the cost savings resulting from the added capabilities of the new system.

Cost-Benefit Conclusions

- Development of SOC appears justified based on initial cost-benefit analysis
- User charge estimated as $135,000 per working manday.
- Evolutionary approach is best-costs deferred until related benefits are significant.

RESEARCH AND DEVELOPMENT AMORTIZATION

The total research and development projection for the SOC systems in 1982 dollars is approximately four billion. If one applies a 10% discount rate and a representative 15-year write off of this investment, we find that the annual cost of the investment over the 15-year write-off period is $530 million. In order to gain an estimate of the potential for increased business and economic growth resulting from this facility, we estimated the total value of a representative all-up shuttle flight including the shuttle launch, a representative upper stage use charge, and finally the investment in spacecraft assuming that this shuttle flight could deliver 15,000 to 20,000 pounds of spacecraft to geosynchronous orbit. The estimated total value in 1982 dollars is $200 million.

If this value represents a utilization of U.S. space operations services that would otherwise go to overseas operators, one should include the indirect multiplier that can be attributed to funds spent for space operations services. The indirect multiplier is very difficult to estimate. It represents further disposition of funds, paid as salaries to those people that directly benefit from the $200 million in terms of goods and services they purchase. An exceedingly conservative estimate of the indirect multiplier is two. Figures as high as seven have been estimated by some economists. With consideration of the multiplier effect, the SOC operational benefits must attract from less than one to somewhat more than one equivalent shuttle flight in added business each year.

The number of jobs directly attributable to the attraction of one equivalent shuttle flight to U.S. operations is between 5,000 and 10,000.

SPACE OPERATIONS CENTER

Research And Development Amortization

BOEING

NASA

SOC-1562

R&D COST ESTIMATE (1982$)

INITIAL	2273M
INCREMENT FOR OPERATIONAL EQUIPMENT	908M
INCREMENT FOR SPACE-BASING AND CONSTRUCTION EQUIP.	853M
TOTAL	4034

ANNUAL COST FACTOR

10% DISCOUNT & 15-YR WRITEOFF:

$$F = \frac{0.10}{1 - \frac{1}{1.1^{15}}} = 0.131$$

ANNUAL COST = 0.131 X 4034M

= $530M

VALUE OF A SHUTTLE FLIGHT

SHUTTLE FLIGHT	50M
UPPER STAGE USE CHARGE	10M
SPACECRAFT	150M
ROUGHLY	200M

INDIRECT MULTIPLIER– VARIOUSLY ESTIMATED AS 2 TO 7.

SOC OPERATIONAL BENEFITS NEED TO ATTRACT 0.4 TO 1.3 EQUIVALENT SHUTTLE FLIGHTS IN BUSSINESS EACH YEAR

DIRECTLY ATTRIBUTABLE JOBS: 5000 TO 10,000 PER FLIGHT PER YEAR.

SOC INVESTMENT AND OPERATIONS AMORTIZATION

An amortization estimate for the SOC investment indicates an approximate cost of $500 million per year including amortization of the investment in flight hardware. Based on the crew size supported and a 313-day work year, the appropriate user charge is approximately $135,000 per man-day, equivalent to $42 million cost for a research project that averages one full-time crew member for one year.

The derivation of the resupply cost is summarized at the bottom of the page.

SPACE OPERATIONS CENTER

NASA

SOC-1553

SOC Investment & Operations Amortization

BOEING

STRAIGHT-LINE AMORTIZATION		CREW SIZE (MAX)	12
15 YEARS	$250M	WORK DAYS/YR	313
RESUPPLY PER YEAR	$200M	3756 MAN DAYS/YEAR	
FLIGHT CREWS - 3 X 12 @ $1M/YR	$ 36M	OR	
OPERATIONS SUPPORT	$ 20M	$42M FOR A RESEARCH PROJECT AVERAGING ONE FULL-TIME CREW MEMBER FOR A YEAR.	
500 PEOPLE @ $40K			
TOTAL –	$506M/YR		

* 17-TONNE PAYLOAD YIELDS USE CHARGE FACTOR OF 0.768

SHUTTLE CHARGE = 0.768 X 50M =	$38.4M
EXTRA DAY	$ 1 M
LOGISTICS MODULE OPERATIONS	$10 M (GUESS)
	$49.4M, FOUR TIMES PER YEAR

SHUTTLE-SPACELAB COMPARISON

In order to estimate the benefits derived from SOC operations as compared to Spacelab operations for applications science and technology, it was necessary to develop an estimate for the cost per crew man-day for Shuttle Spacelab operations. In order to make this estimate, it was assumed that the Shuttle Spacelab flight would be for 10 days duration and would include four payload specialists in addition to the two Shuttle flight crew.

Because announced U.S. policy for Shuttle user charges states that actual costs will be recovered after an initial period, a rough estimate of the actual 1982 dollar costs is indicated here as the basis of comparison. The SOC resupply costs are also shown on the same page strictly for comparison purposes.

At the bottom of the page we illustrate the estimate of $1.64 million per man-day for a Shuttle Spacelab flight. This is based on $82 million for the flight and five people working for 10 days, providing an equivalent of 50 man-days.

Payload integration costs were not compared between the Shuttle Spacelab system and the SOC system. We expect they would be comparable.

SPACE OPERATIONS CENTER

NASA

OC-1564

Shuttle-Spacelab Comparison

BOEING

	REIMBURSEMENT GUIDE		ESTIMATED ACTUAL		SOC RESUPPLY
	1975$	1982$	1982$		1982$
SHUTTLE	18	28	50	(X.768)	38.4
ELEC. PWR CRYO KIT	0.3	0.5	1		–
EXTRA DAYS (9)	2.7	4	9	(1)	1
P/L SPECIALISTS (4)	1.2	1.85	2		–
SPACE LAB	5.4	8.3	20	LM OPS	10
			82		49.4

TAKING CREDIT FOR ONE FLIGHT CREW MEMBER, SHUTTLE/SPACELAB MANDAY COST IS

$$\frac{\$82M}{5 \times 10} = \$1.64M$$

RESEARCH AND APPLICATIONS BENEFITS ESTIMATE
ELASTIC DEMAND MODEL

In calculating the estimated benefit derived from the lower cost of the Space Operations Center for applications science and technology missions, we cannot compare the SOC costs with the Spacelab costs for the same total amount of activity. If demand existed for that much applications science and technology activity at Spacelab costs, then that much activity would in fact occur.

We have estimated the Spacelab demand as an equivalent of three flights per year of 10 days duration each. The mission model estimates for SOC demand for the median traffic model, are approximately three dedicated crew persons, or 1,250 man-days per year. This occurs at a cost of $135,000 per man-day. Thus the total cost for SOC satisfaction of a 1,250 man-day demand versus Spacelab satisfaction of a 150 man-day demand actually results in a total cost of the SOC missions less than the cost of the three Spacelab missions. This suggests that the SOC demand estimate is exceedingly conservative. If services were available at less cost one might expect additional funds to be expended.

In order to compute the SOC benefit, we used an elastic demand model in which the demand for service was projected as a constant multiplied by a cost-per-unit-of-service taken to an exponent calculated from the two demand points. The demand curve equation is illustrated.

This calculation assumes that the satisfaction of the Spacelab level of demand at the SOC costs provides a clear benefit based on the difference in cost. This figure is $226 million. We then presume that additional services satisfy demands that exist at less cost. The demand that would exist at any particular cost is indicated by the demand curve. The total benefit provided for this additional service is the integral of this curve. The cost for this service is the SOC cost and the difference is the net benefit attributable to SOC. These two figures are summed to a total benefit of $513 million per year. This total benefit may be compared with the $506 million earlier derived for SOC investment and operations amortization.

SPACE OPERATIONS CENTER

NASA

SOC-1484

Research & Applications Benefits Estimate Elastic Demand Model

BOEING

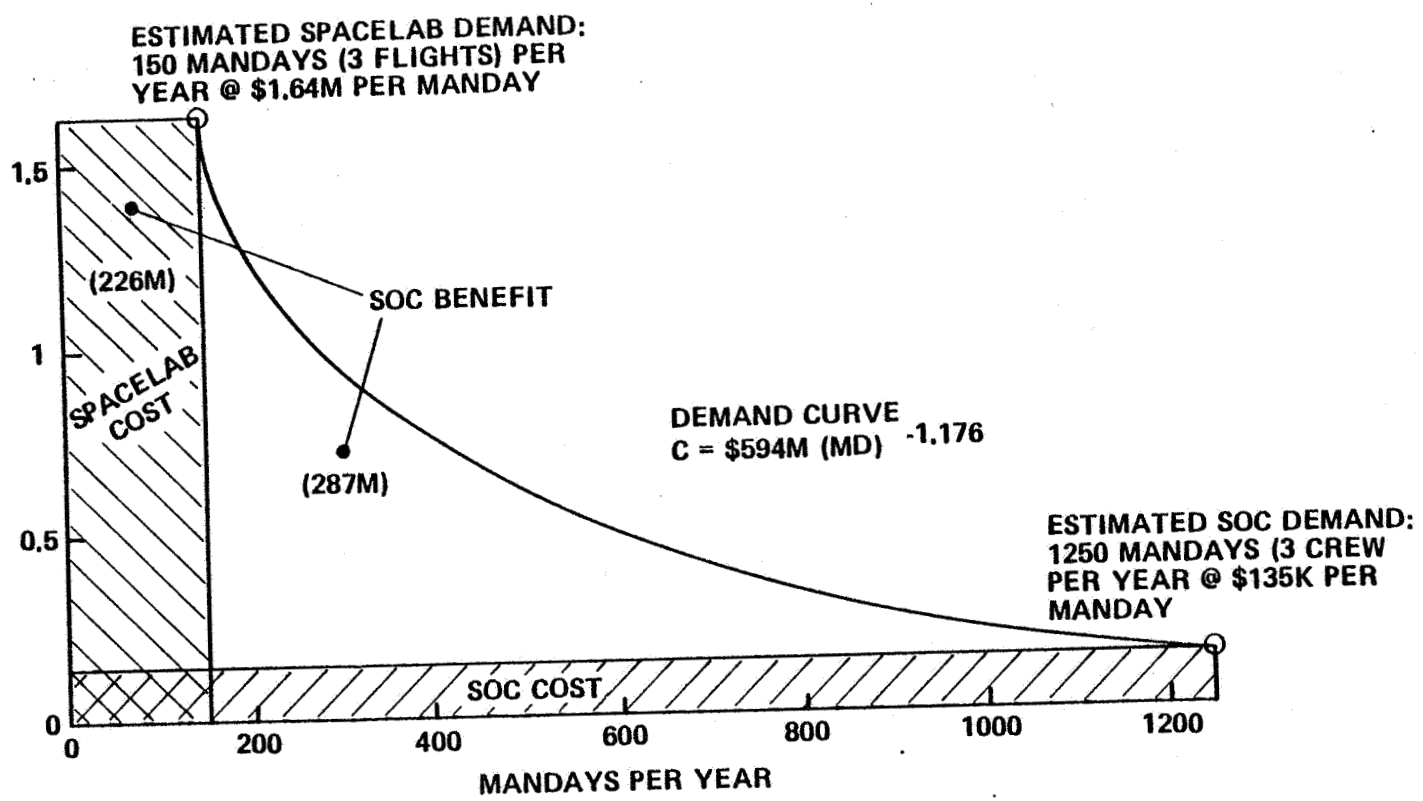

TOTAL BENEFIT: $513M PER YEAR

COST-BENEFIT CONCLUSIONS

The development of the SOC appears justified based on initial cost-benefit analyses. Conservative estimates of the increased business and economic growth attracted to the U.S. services by the availability of the SOC will more than write off the investment in research and development. Based on estimated user charges of $135,000 per working man-day, the benefits for research and applications missions exceed the write-off of the investment and operations cost. Finally, advanced technology operations services such as space basing of upper stages was concluded to be a cost benefit inasmuch as the reduction in transportation operations provided savings greater than the cost for the additional SOC crew and equipment required to service these operations.

To maximize cost benefit one should defer costs until the related benefits available are significant. This further reinforces the recommendation for the evolutionary system approach.

SPACE
OPERATIONS
CENTER

NASA

BOEING

SOC-1562

Cost/Benefits of SOC

Costs	Benefits
Research & Development	Increased Business and Economic Growth
Investment	New Capabilities and Cost Savings
Operations	Offsetting Cost Savings

SOC PROGRAM RECOMMENDATIONS

SOC program recommendations are summarized on the facing page. During the pre-phase B period we should complete the investigation of the modular evolutionary concept. The configurations illustrated have not yet been subjected to all of the operations and subsystems analyses needed to fully validate the approach and finalize the design concepts. Secondly, certain technical emphasis areas should be studied during this study activity. The most important ones are indicated on the chart.

The phase B study should encompass the entire system in preliminary design activities while emphasizing the initial modules. All modules should be defined in sufficient details so that specifications can be written and so that additional phase B activities for later modules would not be needed. Finally, since software development is a potential schedule tentpole, the software preliminary design for the initial SOC should be completed during the phase B process.

The modular evolutionary approach is the most promising for the SOC system. This approach should be pursued in subsequent study activities.

The SOC systems should employ advanced technology in the sense of using the latest technology available to maximize the useful life of the SOC systems. Finally, since the SOC can be expected to operate with an advanced technology OTV, the development of the SOC should be coordinated with study and development of an advanced technology OTV in order to maximize the operational compatibility.

SPACE OPERATIONS CENTER

NASA

SOC-1526

SOC Program Recommendations

BOEING

- Pre-Phase B
  - Complete investigation of modular evolutionary concepts
  - Technical emphasis areas: electrical power; data management; flight control and dynamics; communications
- Phase B
  - Cover entire system in preliminary design
  - Emphasize initial modules
  - Complete software preliminary design
- Development
  - Pursue modular evolutionary approach
  - Employ advanced technology
  - Coordinate with development of advanced technology OTV